MITSUBISHI ELECTRIC
Changes for the Better

FR-Family

Frequency Inverters

Intelligent Drive Technology

Top of Every Class

Cost-Effective / Reliable / Safe /
User-Friendly / Network-Capable / Flexible /

Universally accepted

Frequency inverters made by Mitsubishi Electric carry all the major national and international marks of conformity.

Installed over 18 million times

Drives for all conceivable applications: there's something for everyone at Mitsubishi Electric! With more than 18 million of our frequency inverters installed we are one of the largest manufacturers in the world. Day after day, in heavy-duty industrial use, our frequency inverters prove their high levels of cost-effectiveness, reliability, functionality and flexibility.

Frequency inverters developed by Mitsubishi Electric are used routinely in many sectors and systems – and that's not all. Mitsubishi Electric know-how also features in many frequency inverters made by other manufacturers who are utterly convinced by its technical edge and economic benefit.

Always one step ahead of technology

Innovative technologies applied by Mitsubishi Electric in developing their frequency inverters result in highly dynamic drive systems and genuine power misers. Examples of this innovative power are the new functions RSV control (Real Sensorless Vector Control) and OEC control (Optimum Excitation Control).

Meeting global norms and standards

Mitsubishi Electric's frequency inverters meet all the standards and specifications laid down in the EU Low Voltage Directive 73/23/EEC and the Machinery Directive 98/37/EC. Needless to say, all the units carry the CE mark and are certified as conforming to UL, cUL and GOST.

Contents

The six ingredients for success	4–5
The right solution everytime	6
FR-A800 – Leading drive performance	7–9
FR-F700 – Power saving inverters	10
FR-E700 SC – Compact inverters	11
FR-D700 SC – Standard inverters	12
Peripherals and software	13
Increased productivity	14
Optimum speed	15
Extreme cost efficiency	16
Potential savings	17
A world of applications	18

The six ingredients for success

Cost effectiveness

Energy savings of up to 60 % can be made by using Mitsubishi Electric frequency inverters, thereby also reducing CO_2 emissions and protecting the environment.

Reliability

Safe and fault-free operation is guaranteed by various protective mechanisms and overload functions, top-quality temperature-resistant capacitors, permanently lubricated fans and dual-coated power and control PCBs.

The Six Sigma certified production ensures a high quality level at Mitsubishi Electric.

Standards

In addition to complying with well-known international norms and standards, the frequency inverters are also certified by the Det Norske Veritas foundation (DNV).

An increased level of safety is ensured in some frequency inverter ranges by the integrated emergency stop function (Safety Stop).

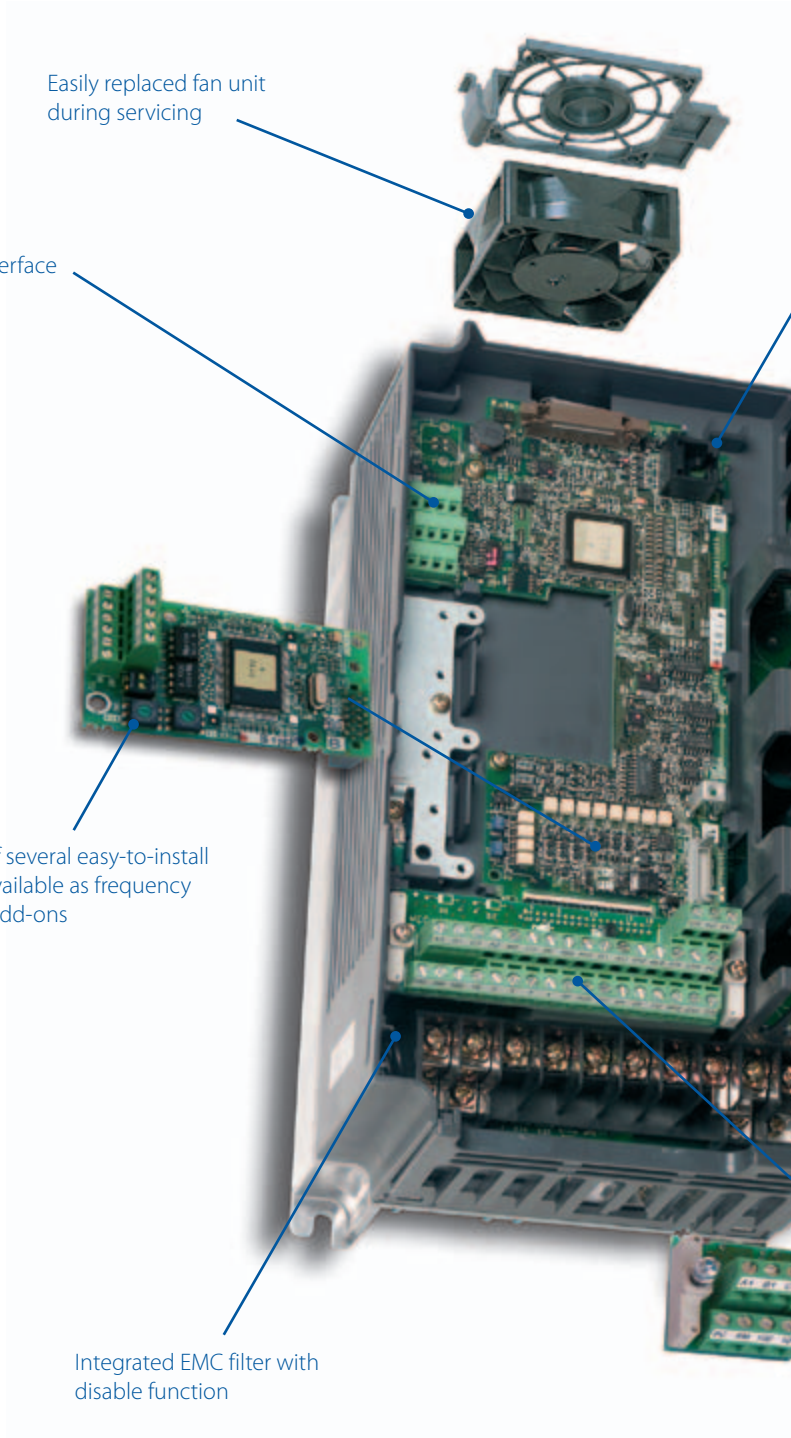

Convenience

The integral multifunction user panel, complete with digital dial, facilitates rapid and efficient input of all necessary drive parameters. It can also provide display of various performance data and error messages.

Flexibility

Compatible with all major field bus systems such as Profibus DP, DeviceNet, CC-Link, Ethernet, CANopen, Modbus, BACnet and LonWorks (the international communication standard in building services automation).

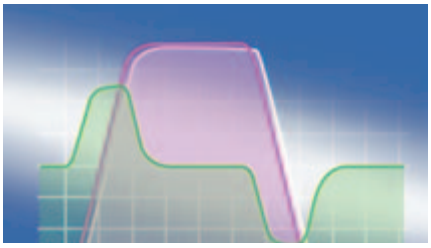

Functionality

Functionality, compatibility and perfect mechanical design are the main features of the frequency inverters supplied by Mitsubishi Electric.

Not all features are available on all Inverters.
Please check applicability.

The right solution every time

A diverse product range helps you make the right product choice.

Well set

Mitsubishi Electric always has the right drive system for straightforward and complex applications alike. With so many sizes, outputs and features, the right frequency inverter solution is available for every conceivable drive requirement.

Indeed, in applications where space is at a premium, it can pay to know that Mitsubishi Electric frequency inverters have numerous overload versions.

In many cases a smaller frequency inverter can be used – logically resulting in reduced purchase costs, lower running costs and a smaller footprint.

The majority of frequency inverters supplied by Mitsubishi Electric come as standard with 200 % overload capacity. The benefit for the user is that our frequency inverters offer double the output of comparable types made by our competitors.

FR-A800 – Leading drive performance

The frequency inverters, developed by Mitsubishi Electric, boast cutting-edge technologies for optimum motor torque and speed control.

The FR-A800 series is the successor of the highly successful FR-A700 series. It is equipped with the new state-of-the-art high-speed processor by Mitsubishi Electric. With better than ever control performance and response level, safe and accurate operation is assured in a diverse range of applications.

Some of the outstanding features are the integrated USB ports for programming and parameter copying, an-easy to-read control panel, optimum power usage and energy saving functions, improved system safety, three expansion slots for a range of option and supported network cards

With its impressive versatility to meet equipment system needs ranging from machining and molding to winding, the FR-A800 is an extremely economical and highly-versatile solution for a wide range of applications.

The FR-A800 series is fully backwards compatible with the FR-A700 series. Parameters can be easily copied by FR Configurator2. In order to match the former machine response time, the input/output signals of the FR-A800 can be delayed.

The FR-A800 is suitable for use in a broad range of applications e.g. conveying and handling systems.

FR-A800 at a glance

Power range
0.4–630 kW

Input
200/400/500 V* 3 ph (50/60 Hz)

Output frequency
0–590 Hz
0–1000 Hz special type

Protection
up to 22 kW IP20, from 30 kW IP00

Control
V/f, OEC, RSV, CLV, Built-in PLC
Autotuning for AC and PM (Permanent Magnet Motors)

Integrated interfaces
Modbus RTU, RS485, USB

Optional extras
Analogue + digital I/Os, encoder feedback

Network links
CC-Link, CC-Link IE Field, Profibus DPV1, Profinet, DeviceNet; Ethernet IP, SSCNETIII/H, LonWorks, Can bus

EMC protection
Integrated

* Depends on performance class

Intelligent solutions for every requirement.

Dynamics and precision: FR-A800

The drive behind your success

FR-A800: The wide power zone, of 0.4 to 630 kW's, is covered by range of conveniently sized units.

Suspended loads can be positioned accurately thanks to motor and encoder feedback.

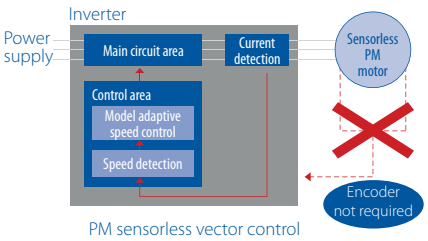

Sensorless vector control ensaves faster response

Intelligent functions for any application

Sensorless vector control (RSV)

Equipped with their innovative RSV function (Real Sensorless Vector Control), Mitsubishi Electric frequency inverters have the ability to control the speed and torque of an AC motor without an encoder. The result is maximum performance across the full speed range in terms of dynamic response, precision and control. The motor thus sustains optimum dynamic speed characteristics, smooth rotation and high starting torque. As such, the FR-A800 is capable of achievements which used to be the reserve of high-end DC or servo systems.

Autotuning

Precise motor data forms the basis for optimum control of the vector drive without an encoder. All FR-A800 series inverters come with an autotuning function for AC and PM motors which identifies all the parameters required for the motor model in less than one minute, even if the motor is not running.

Sufficient memory is available to store data records for up to two motors. Online autotuning offers the facility to automatically record and offset changes to the data in operation, e. g. caused by changes in temperature.

Another tuning process (easy gain tuning) simplifies optimisation of the speed regulator. The sequential response of the motor is automatically detected and the control parameters adjusted for optimum performance. Labour-intensive manual tuning of the control parameters is a thing of the past.

Economy-rate positioning

The FR-A800 can also be used for positioning in conjunction with the "Closed Loop Vector Control". Full point to point positioning including different homing functions are available.

Optimum excitation control

Optimum control of the excitation current maximizes motor efficiency for additional energy savings. As an example, an approximately 15 % increase in efficiency is obtained at a motor load torque of 10 % compared to conventional V/F control.

Boost productivity while saving energy

Energy-saving functions well suited to the system and purpose application An energy monitor lets you confirm energy-saving at a glance. Measured values for power output can also be output as pulse signals. An external 24 V DC power source can be used to operate control circuits other than the drive unit.

PLC functions

The PLC functions integrated in the FR-A800 and FR-F700 mean optimum tailoring to the requirements of the user. The PLC offers direct access to all the drive parameters and will, on request, undertake plant management as a stand-alone control and monitoring unit. The password protection prevents unauthorized access to your expertise.

Mitsubishi Electric's programming software GX Works2 is a straightforward tool for programming the PLC functions.

PLC function programming is now also possible by FR Configurator2.

Various network compatibility

The drive can be controlled and monitored by a controller via network. For the major network protocols such as CC-Link IE Field, CC-Link, Profibus DP/DPV1, Profinet/Ethernet IP/EtherCat (to be released soon) and SSCNETIII/H as well as DeviceNet™, LonWorks and Can bus communication options are available. RS485 communication (Mitsubishi Electric drive protocol, Modbus-RTU protocol) is supported as standard.

Integration in positioning systems

All the frequency inverters in the FR-A800 series can be used with servo drives within a motion system. Connection is simple using Plug and Play via SSCNETIII/H. The FR-A800 can even work as a leading axis drive. As such, there is no reason why the drives cannot be integrated further in existing control concepts.

Self-diagnosis for easy maintenance

Frequency inverters in the FR-A800 range monitor their own operational reliability. The innovative diagnosis and maintenance functions monitor all the components which are subject to wear and issue prior warning when due. Precautions are therefore in place to prevent failure and long downtimes.

Many protective mechanisms and overload functions guarantee fault-free operation and therefore supreme availability and operational reliability.

Extended service life

Mitsubishi Electric frequency inverters are noted for their durability. The FR-A800 also sets the benchmark in terms of product life. It is designed to last for over 10 years giving an investment which pays time after time.

Fourfold overload capacity

Many manufacturers of frequency inverters have specified various overload rating classes for their products – but rarely more than two. The FR-A800 is designed for no less than four overload ranges! This makes it easier to select the best frequency inverter for any application.

User friendly

The operation panel with the one touch Digital Dial allows direct access to all important parameters. Select the operation panel ideal for your needs. Choose either a LU operation panel with an LCD screen offering enhanced display functionality and a Real Time clock function, or a more economical DU operation panel with a 5-digit, 12-segment display.

The FR-A800 series also allows the connection of a Mitsubishi Electric graphical operation terminal (GOT). The connection to GOT2000 series is made by just plug and play (automatic setting of all needed parameters). The GOT provides operators with an easy-to-follow and intuitively high resolution display and facilitates easy operation via a touch panel.

Easy setup

Users can comfortably setup the drives with the Setup-Software FR Configurator2. The easy plug-and-play connection to USB terminal is equipped as standard. Parameters and PLC programs can be simply copied from and to commercial USB memory devices.

Easy operation with GOT

Clear user interface layout with project navigator for rapid programmiung

Tuning made simple

FR-F700 – The power saving inverter

Pump systems in industry – one domain of the FR-F700 frequency inverters

Economic powerhouse: the FR-F700

The frequency inverters in the FR-F700 range have been especially designed for pump and fan applications as well as heating, ventilation and air-conditioning installations (HVAC). Besides their protection ratings IP00/IP20 (FR-F740) and IP54 (FR-F746), the outstanding features of these power-saving frequency inverters include their simple but safe operation and start-up, perfect control management and optional network-capability.

Built-in functions, such as the pre-charge function or the PLC functionality, help to reduce the costs and the complexity of many applications, because additional components are eliminated.

Effective energy savings

Pumps and fans are particularly good targets for great reductions in energy consumption. Energy costs can be slashed by up to 60 %, notably in the lower speed or light load range of such applications.

Additional energy savings are effected by the cutting-edge "OEC technology" developed by Mitsubishi Electric. It supplies the motor with the optimum magnetic flux at any given time, thereby reducing losses. The result is maximum motor performance teamed with supreme efficiency.

User-friendly operation

The built-in "digital dial" permits the efficient input of all the necessary drive parameters, cutting down on both programming and start-up time.

Long service life

The FR-F700 can lay claim to a 10-year service life thanks to advanced capacitors and ventilators. These features, along with its simple maintenance and automatic warning signals, make the FR-F700 one of the most reliable inverters on the market.

FR-F740/746 at a glance

Power range
0.75–630 kW

Input
200/400 V AC 3 ph (50/60 Hz)

Output frequency
0–400 Hz

Protection
FR-F740: up to 30 kW IP20,
from 37 kW IP00
FR-F746: IP54

Control
V/f, OEC, SMFV, Built-in PLC

Integrated interfaces
Modbus RTU, RS485, BacNet

Optional extras
Analogue + digital I/Os

Network links
CC-Link, Ethernet, Profibus DP, LonWorks, DeviceNet, Siemens FLN, Metasys N2

EMC protection
Integrated

FR-E700 SC – The compact inverter

The inverters in the FR-E700 SC series are all-rounders and miniature masterpieces given their compact size.

Improved functions like an integrated USB port, an integrated one-touch Digital Dial control with a display as well as improved power usage at low speeds make the FR-E700 SC an economical and highly-versatile solution for a wide range of applications

Small and powerful

These inverters are a popular choice in a wide diversity of applications, from textiles machines to conveyer systems, from door and gate drives to fans and pumps. Featuring Mitsubishi Electric's extended vector control system they are able to achieve torques of 150 % from a frequency of just one Hertz. The autotuning function makes this mode possible even with high fluctuations in motor characteristics. For the user this means ample power under all circumstances, even at very low speeds.

Emergency stop function

The FR-E700 SC series has a two channel emergency stop for safe shutdown. This ensures safe operation in compliance with the European Machinery Directive without installation of another contactor. The FR-E700 SC thus conforms to the ISO 13849-1, PLd and IEC 60204-1 cat. 0 standards.

Intelligent control

Thanks to the integrated PID control these inverters can be used, for example, to control pump flow or for temperature control without any additional expense.

Improved machine protection

Improved torque/current limiting during startup and deceleration ensures better protection for the machine, reliably preventing machine damage.

Material transport systems like this example in a printing works are just one of the many applications for the new FR-E700 series.

Network support

A selection of plug-in option cards are available for the FR-E700 SC that enable it to connect to open fieldbus systems like Profibus DP, DeviceNet and even CC-Link.

FR-E700 SC at a glance

Power range
0.1–2.2 kW 1 ph
0.1–15 kW 3 ph

Input
100 V 1 ph/200 V 1/3 ph/400 V 3 ph (50/60 Hz)

Output frequency
0.2–400 Hz

Protection
IP20

Control
V/f, optimum excitation control, vector, advanced magnetic flux vector control

Integrated interfaces
Modbus RTU, RS485, USB

Optional extras
CC-Link, Ethernet, Profibus DP, DeviceNet, LonWork

All FR-E700 units up to 7.5 kW are less then 150 mm high.

FR-D700 SC– The standard inverter

Door and gate drives are only some of the multiple applications of the FR-D700 SC series

Simple operation

The user-friendliness of the FR-D700 SC series makes these units a particularly good choice for standard applications. Entering drive parameters and settings is quick and easy with the one-touch Digital Dial on the integrated control panel, saving time and cutting costs.

These features make the FR-D700 SC an excellent performer for both simple and more demanding tasks. Typical applications include feed and conveyor drives, machine tools and door and gate drives.

Space-saving installation

The ultra-compact FR-D700 SC can be mounted directly side by side. This saves valuable space in the cabinet.

Conveyor belts and chain conveyors are an ideal application for the FR-D700 SC

Enter the new drive universe

The inverters of the FR-D700 SC series set standards for small-format drives and provide an easy entry to the world of modern variable-speed drive technology. Despite their ultra-compact dimensions they feature a wealth of advanced functions. The FR-D700 SC series is ideal for simple drive applications in environments where space is limited.

Improved functions and device properties such as simplified cabling thanks to spring clamps, the integrated Digital Dial with LED display, improved performance yield in the low-speed range make the FR-D700 the new standard in the ultra compact class

Built-in emergency stop function

The FR-D700 SC series features a dual-channel emergency stop function for a safe torque off. With that the FR-D700 SC conforms to ISO 13849-1, PLd and IEC 60204-1 Cat 0.

FR-D700 SC at a glance

Power range
0.1–2.2 kW 1 ph
0.4–7.5 kW 3 ph

Input
100 V 1 ph/200 V 1/3 ph/400 V 3 ph (50/60 Hz)

Output frequency
0.2–400 Hz

Protection
IP20

Control
V/f, optimum excitation control, general-purpose magnetic flux vector control

Integrated interfaces
Modbus RTU, RS485

Peripherals and software

User-friendly set-up software

The user-friendly set-up software runs on Windows, i.e. the inverters can be configured using standard PCs. Several inverters can be set up, operated and monitored in parallel in one network. Connection is possible either via an RS485 interface or the optional SC-FR PC adapter cable. With FR-A800 and FR-E700 SC also an USB port can be used.

Handy parameter units

For added ease and convenience users may opt for integrated parameter units (FR-E/FR-D700 only) or clip-on parameter units (for all other inverters). A numeric keypad is available for direct input of numerical values. A four-line LCD display provides plain text information about performance data, parameter names, status signals and error messages – in eight languages.

Effective Harmonic Converters

In most cases, the energy given off by a motor in the regenerative mode, is converted to heat by braking resistors and thereby is lost. The Harmonic Converter FR-HC2 returns this energy back to the power source or supplies it to other inverters. The Harmonic Converters is equipped with high quality filters to effctively suppress harmonics.

Configuring the drive via a Windows laptop

Wide range of expansion options

Optional extras are available to optimise and expand system capability. Additional brake components, reactors and filters guarantee operation even in difficult conditions.

The range of functions can be expanded by optional boards, such as additional analogue/digital inputs/outputs.

Strong and smart

The separate Floor Standing Unit (FSU) for FR-F740 Inverters is a simple way of accommodating a free-standing frequency inverter system complying with protection class IP20 for installation in an electrical operating area.

The robust base units come pre-assembled and permit optional integration of a link reactor, a circuit breaker or – if required – an additional EMC filter.

Power regeneration combined with effctive harmonic suppression

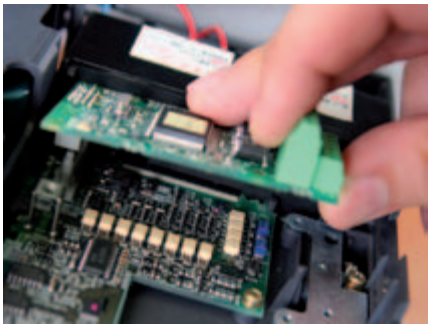

Connector system for time-saving installation

FR-A740 on IP20 protection class base unit

Increased productivity

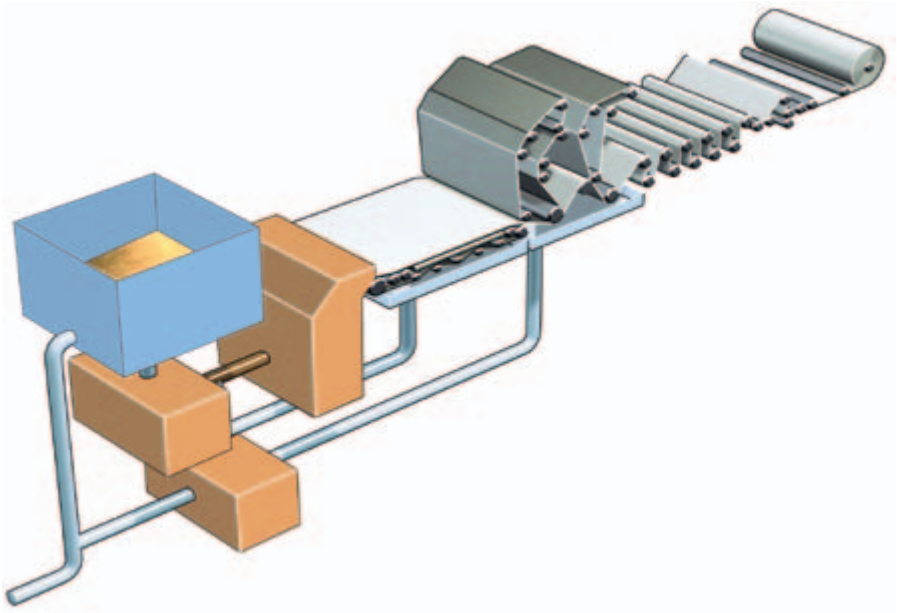

Simplified schematic of paper production

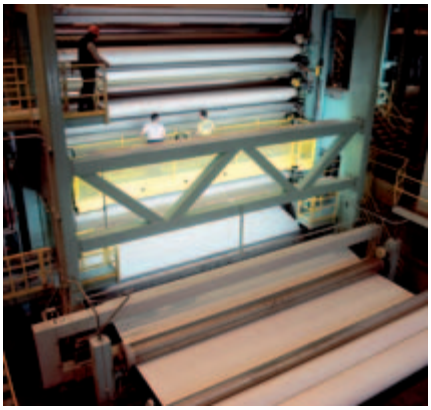

Productivity in paper production has one size parameter: tonnes per hour

Synchronism – the ultimate priority

Precise synchronism of the drives is synonymous with maximum productivity and top quality in the printing and paper production industry. The drives need to retain control of the sheets throughout the entire printing and production process. The intelligent motor control function in Mitsubishi Electric frequency inverters processes the actual values in next to no time and matches the speed and torque to the specified setpoint. This prevents the sheets from tearing or bunching.

Another feature which helps in this regard is the power-down braking function which controls the deceleration of all the drives after a power failure or an emergency machine shutdown. All this translates into maximum productivity and quality.

An advanced version of this control has the ability to operate up to four motors consecutively in alternate and/or changeover mode via one single frequency inverter.

Prepared for the toughest assignments

High temperatures and high air humidity are routine conditions in the printing and paper industry. The capacitors in the top-of-the-range models, the FR-F700 and FR-A800, are therefore designed to withstand internal temperatures of 105 °C. The power and control PCBs have two coatings and the cooling fans are housed in sealed, specially lubricated industrial bearings. There is no better way to prepare frequency inverters to meet human and mechanical requirements.

Optimum speed

Rapid response times essential

Conveyor belts and stock logistics systems need constant speeds and velocities for rapid and systematic transportation of products. As such, the dynamic response generated by the drives needs to be the same when the conveyor belt is empty and when it is full. If there are sudden variations in load, e.g. caused by materials piling up in an uncontrolled way on the conveyor belt, then the drives need to react as quickly as possible in order to smooth the flow of materials.

This is precisely where top speed and torque response times are required for efficient compensation for sudden changes in load. Response times of no more than 5 ms are guaranteed to prevent product congestion and avert any risk to the follow-up process.

Rapid installation and start-up

Customers in the haulage and logistics sector want Plug and Play in order to cut installation and start-up times. Our frequency inverters are therefore fitted as standard with an integrated EMC filter and an integrated brake unit. All part of being prepared for anything.

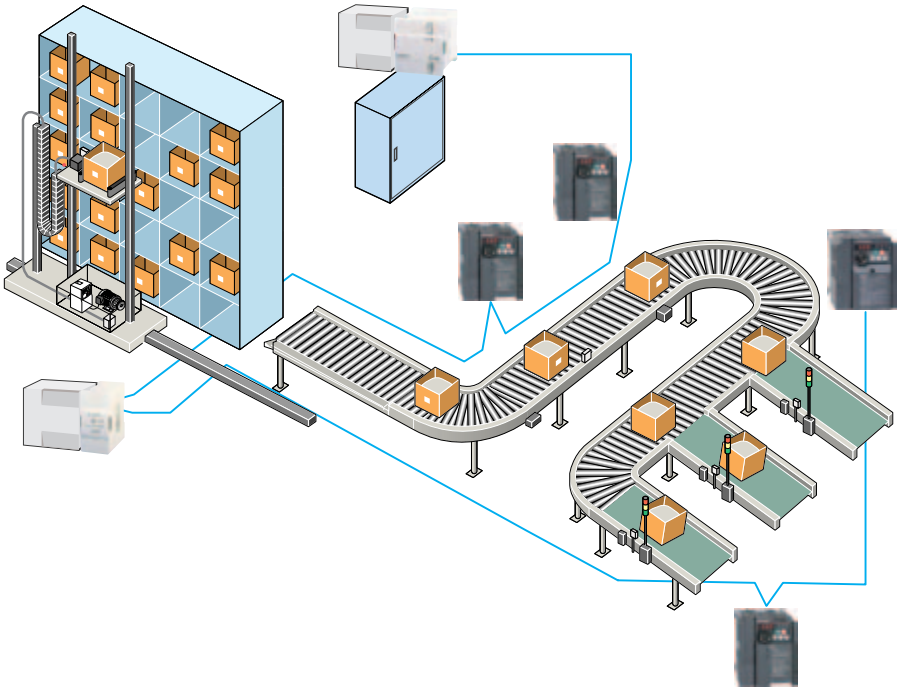

Palletising and warehousing in a high rack stacking system

Saving where motors never stop, Mitsubishi Electric inverters work round the clock!

Extreme cost efficiency

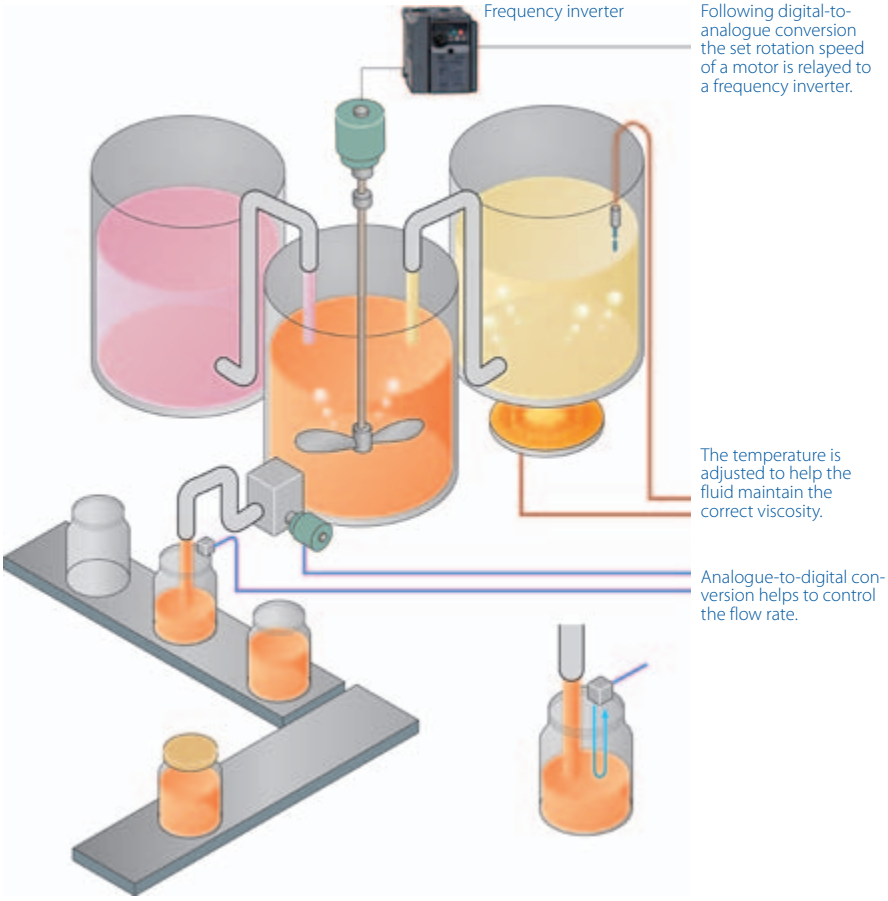

The conversion of analogue values is an important aspect of automation technology and facilitates process control.

Optimum energy efficiency, e.g. in complex pumping applications

Variable speed and efficiency

Maximum efficiency is required from each individual drive in pump and fan applications as well as in mixers and stirrers.

In comparison with mechanical solutions, frequency inverters developed by Mitsubishi Electric are always able to tap the full potential when it comes to savings in energy consumption.

Replacing conventional DC drives with modern three-phase drives will always mean one less cost-intensive maintenance chore. This in turn will mean far fewer drive failures which at worst bring the entire mixing or stirring machinery to a standstill.

Saving energy when starting and braking

The OEC technology (Optimum Excitation Control) developed by Mitsubishi Electric combines maximum drive efficiency with minimum power consumption. The only thing supplied to the connected motor is the magnetic flux which brings about the optimum degree of efficiency at all times. This leads to inordinate improvement in energy efficiency is achieved, particularly in the acceleration and braking phases.

Potential savings

Too powerful and too expensive!

Energy costs are rising all the time. Over half of the power consumed in industry is accounted for by electric motors. Up to 96 % of the life cycle costs of a motor are accounted for by energy costs. Unfortunately, when analysing costs, it is precisely this point which is paid precious little attention or is ignored altogether. The biggest potential source of savings is frequently disregarded.

For example, in order to guarantee that an air handling plant will run smoothly even at full load, which is seldom the case, and to have spare capacity for expansion the systems fans are often over specified. In some cases fans in these applications can be operating at an average efficiency of 65 % or less.

In addition, in conventional systems the equipment is usually controlled by mechanical ventilation flaps which slashes efficiency levels, especially with medium loads. The flap control function can very easily be replaced by the use of frequency inverters and the power consumption reduced by 20 to 60 %.

Result: wasted energy

Oversized fan, pump and motor systems combined with continuous operation at maximum capacity means many systems are operated at levels far below ideal in terms of efficiency. This leads to excess power consumption which can only really be explained by ignorance or poor practise.

A Mitsubishi Electric frequency inverter is a safe investment

Countermeasures

The power consumption of slow running motors can be reduced if the speed is controlled by changing the frequency. The frequency inverter allows the motor to be adjusted to the load. Frequency inverters which generate variable frequencies and voltage levels save energy, reduce wear on the motor and minimise wear and tear on the motor-driven assembly.

They also allow far greater flexibility when it comes to organising operating prorecedures.

Save on energy costs by investing in the Mitsubishi Electric family of inverters

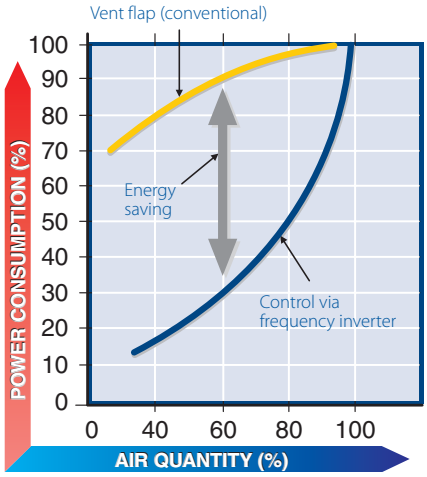

Example: A motor controlled by a frequency inverter (blue line) is using the energy to extract air. The mechanically throttled motor doing the same task but operated directly on the mains (yellow line) is wasting a large amount of the energy.

A world of applications

Mitsubishi Electric frequency inverters are used in a wide range of areas.

Mitsubishi Electric operates 11 branches in Europe, where it has maintained a presence for more than 30 years and developed a constantly growing and far-extending network comprising links to other companies and reliable partnerships.

On the technical side, three manufacturing and automation centres form the basis of tailored automated solutions, further centres already being planned.

A Europe-wide network provides interfaces to experienced engineers and offers distributors support throughout every phase of the project.

Mitsubishi Electric products are found in a variety of industrial, infrastructure and service sector contexts, ranging from critical applications in the pharmaceuticals industry to state-of-the-art leisure and entertainment facilities. Here are just a few examples of recent applications:

- Agriculture
  - Irrigation systems
  - Plant handling systems
  - Sawmills
- Building management
  - Smoke detection monitoring
  - Ventilation and temperature control
  - Lift (elevator) control
  - Automated revolving doors
  - Telephone management
  - Energy management
  - Swimming pool management
- Construction
  - Steel bridge manufacturing
  - Tunnel boring systems
- Food and drink
  - Bread manufacture (mixing/baking)
  - Food processing (washing/sorting/slicing/packaging)
- Leisure
  - Multiplex cinema projection
  - Animated mechatronics (museums/theme parks)
- Medical
  - Respiration machine testing
  - Sterilization
- Pharmaceutical/chemical
  - Dosing control
  - Pollution measurement systems
  - Cryogenic freezing
  - Gas chromatography
  - Packaging
- Plastics
  - Plastic welding systems
  - Energy management systems for injection moulding machines
  - Loading/unloading machines
  - Blow moulding test machines
  - Injection moulding machines
- Printing
- Textiles
- Transportation
  - Sanitation on passenger ships
  - Sanitation on rail rolling stock
  - Fire tender, pump management
  - Waste disposal truck management
- Utilities
  - Waste water treatment
  - Fresh water pumping

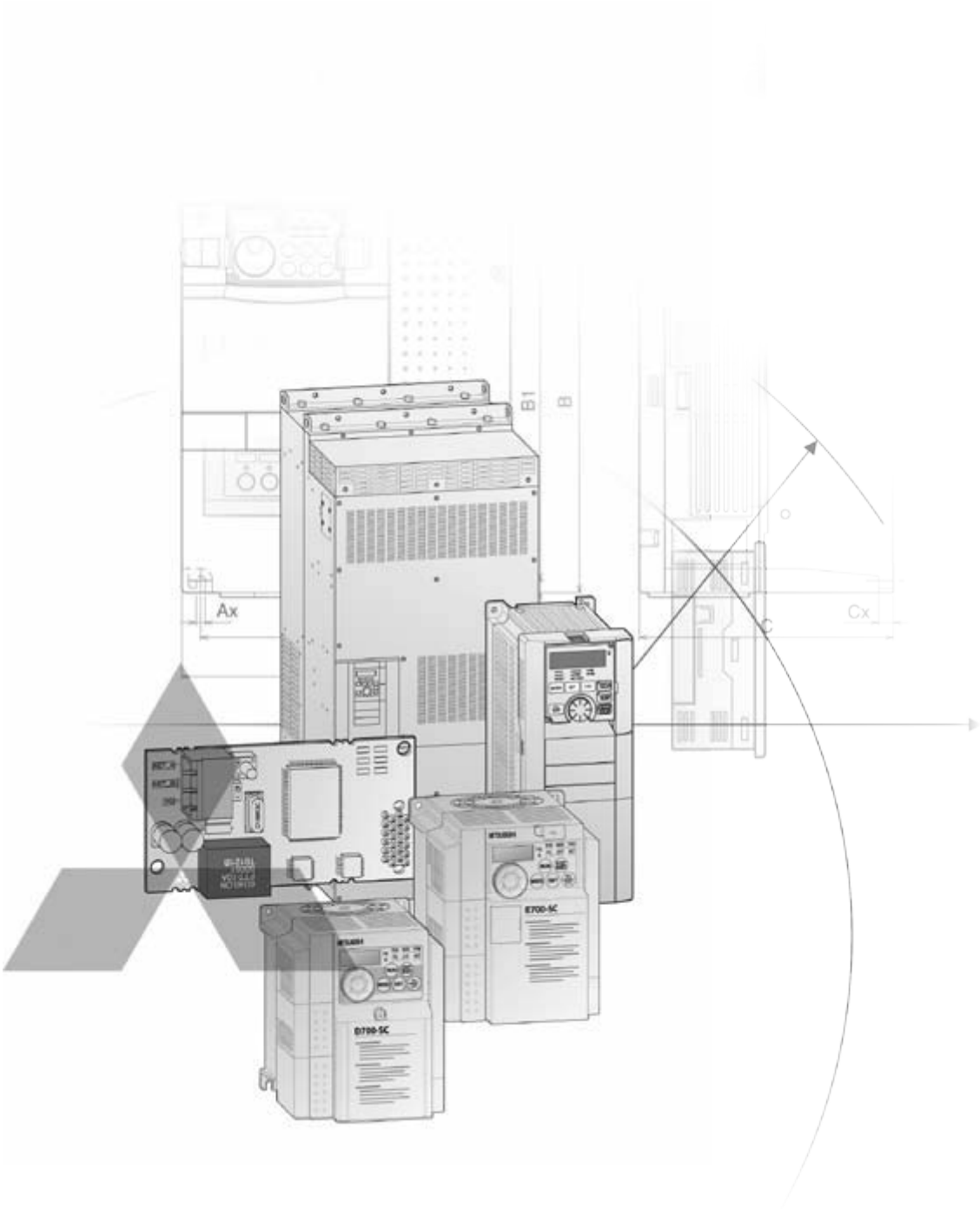

Technical Information Section

Further Publications within the Mitsubishi Electric family

Brochures

Q/L Family

Product catalogues for modular programmable logic controllers and accessories for the MELSEC System Q and MELSEC L series

FX Family

Product catalogue for compact programmable logic controllers and accessories for the MELSEC FX family

HMI Family

Product catalogue for operator terminals, supervision software and accessories

Servo and Motion Systems

Product catalogue for servo amplifiers and servo motors as well as motion controller and accessories

Robots Family

Product catalogue for industrial robots and accessories

Low Voltage Switchgears

Product catalogue for low voltage switchgears, magnetic contactors and circuit breakers

Automation Book

Overview on all Mitsubishi Electric automation products, like frequency inverters, servo/motion, robots etc.

Further service supplies

This product catalogue is designed to give an overview of the extensive range of the Mitsubishi Electric frequency inverters.
If you cannot find the information you require in this catalogue, there are a number of ways you can get further details on configuration and technical issues, pricing and availability.

For technical issues visit the https://eu3a.mitsubishielectric.com website. Our website provides a simple and fast way of accessing further technical data and up to the minute details on our products and services. Manuals and catalogues are available in several different languages and can be downloaded for free.

For technical, configuration, pricing and availability issues contact our distributors and partners. Mitsubishi Electric partners and distributors are only too happy to help answer your technical questions or help with configuration building. For a list of Mitsubishi Electric partners please see the back of this catalogue or alternatively take a look at the "contact us" section of our website.

About this Product catalogue

This product catalogue is a guide to the range of products available. For detailed configuration rules, system building, installation and configuration the associated product manuals must be read. You must satisfy yourself that any system you design with the products in this catalogue is fit for purpose, meets your requires and conforms to the product configuration rules as defined in the product manuals.

Specifications are subject to change without notice. All trademarks acknowledged.
© Mitsubishi Electric Europe B.V., Factory Automation - European Business Group

The products of Mitsubishi Electric Europe B.V., that are listed and described in this document, are neither subject to approval for export nor subject to the Dual-Use List.

1 System Description

- Introduction to the Mitsubishi Electric inverter series 4
- Overview of Mitsubishi Electric frequency inverters 5
- Intelligent technology 6
- Special features for FR-A800 7
- Communications 8
- User-friendly Operation 9
- Maintenance and standards 10

2 Specifications

- The FR-D700 SC series 12
- The FR-E700 SC series 16
- The FR-F700 series 20
- The FR-A700 series 26
- The FR-A800 series 32
- Parameter overview 44
- General operating conditions for all frequency inverters 45
- Overseas types 92

3 Accessories

- Overview of internal and external options 48
- Noise filters 53
- du/dt filters 55
- Sinusoidal filters 56
- External heatsinks and floor standing units 57
- AC chokes 58
- DC chokes 58
- Parameter units 60
- Brake units 61
- Brake resistors 62
- Harmonic converter 63
- Profibus gateway 66
- Software FR Configurator 67

4 Dimensions

- Parameter units 68
- Frequency inverters 69
- DC chokes 78
- AC chokes 81
- Noise filters 81
- du/dt filters and sinusoidal filters 84
- Brake units 85
- Brake resistors 87
- Harmonic converter 88
- Profibus gateway 88

5 Appendix

- Index 96

Mitsubishi Electric Frequency Inverters

The great variety of the Mitsubishi Electric frequency inverter models makes it easy for the user to choose the optimum inverter for his application.

There are basically five different inverter series:

- FR-D700 SC
- FR-E700 SC
- FR-F700
- FR-A700
- FR-A800

The frequency inverters are available with an output range from 0.1 kW to 630 kW.

With most Mitsubishi Electric frequency inverters an overload capacity of 200 % is standard. This means they deliver double the performance of the competing frequency inverters with the same rating. Mitsubishi Electric inverters also have active current limiting. This provides the perfect response characteristics of the current vector system and gives you the confidence you need for demanding drive applications.

The system instantly identifies over currents and limits them automatically with fast response, allowing the motor to continue operating normally at the current threshold.

Mitsubishi Electric frequency inverters are also able to communicate with industry standard bus systems like Ethernet TCP/IP, Ethernet IP, Profinet, Profibus DP, Profibus DPV1, DeviceNet, CC-Link, CC-Link IE Field, LonWorks, RS485/Modbus RTU, CanOpen making it possible to integrate frequency inverters as part of a complete automation system.

Mitsubishi Electric inverters are real energy savers achieving maximum drive capacity utilisation with minimum power consumption. Flux optimisation ensures that the connected motor only gets exactly the amount of magnetic flux required for optimum efficiency. This is particularly important at low speeds as motors are normally using a voltage/frequency control system. speeds as motors are normally using a voltage/frequency control system.

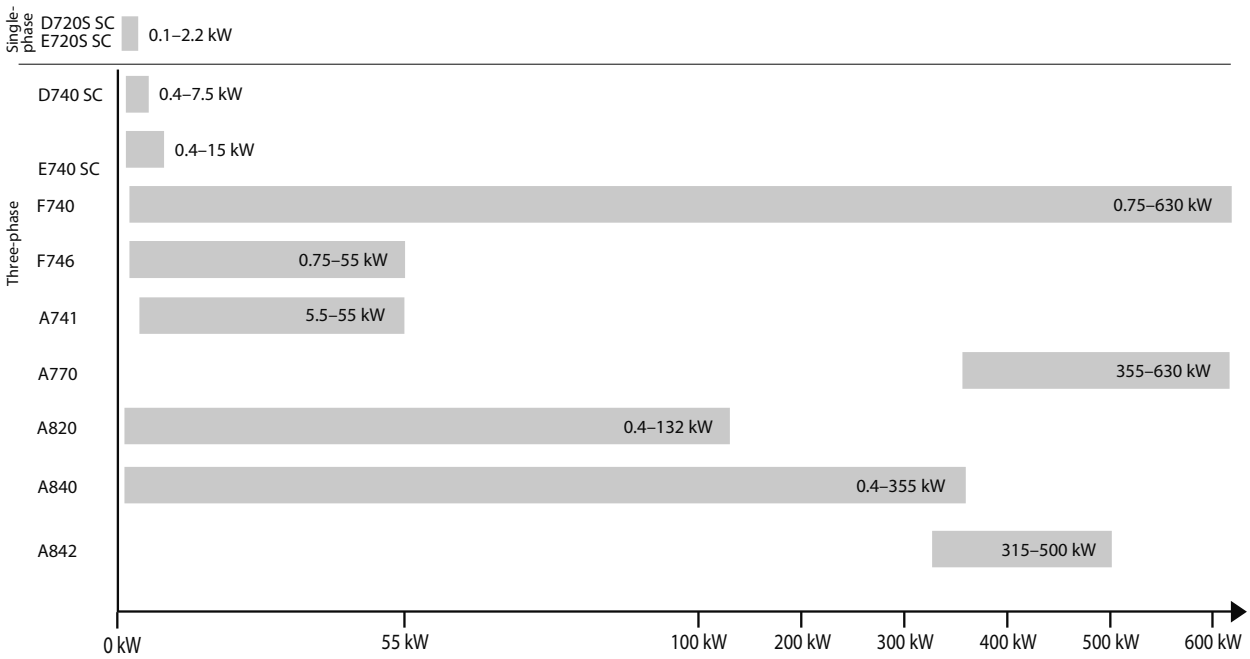

Feature	FR-D700 SC	FR-E700 SC	FR-F700	FR-A700	FR-A800
Rated motor output range	0.1–7.5 kW	0.1–15 kW	0.75–630 kW	FR-A741: 5.5–55 kW FR-A770: 355-560 kW	0.4–500 kW
Frequency range	0.2–400 Hz	0.2–400 Hz	0.5–400 Hz	0.2–400 Hz	0.2–590 Hz
Power supply	Single-phase, 200–240 V (-15 %/+10 %) Three-phase, 380–480 V (-15 %/+10 %)	Single-phase, 200–240 V (-15 %/+10 %) Three-phase, 380–480 V (-15 %/+10 %)	Three-phase, 380–500 V (-15 %/+10 %)	Three-phase, FR-A741: 380–480 V (-15 %/+10 %) FR-A770: 600–690 V (±10 %)	Three-phase, FR-A820: 200–240 V FR-A840/A842: 380–500 V (-15 %/+10 %)
Protection	IP20	IP20	FR-F700: IP00/IP20 FR-F746: IP54	IP00	IP00/IP20
Special functions	● V/f control ● Sensorless vector control ● Brake transistor ● Safe Torque Off (STO) according EN 61800-5-2 ● Energy saving control (Optimum excitation control) ● Life time diagnostics ● Dancer Control	● V/f control ● Sensorless vector control ● Brake transistor ● Safe Torque Off (STO) according EN 61800-5-2 ● Torque limit ● Ext. brake control ● Flying start ● Remote I/O ● Life time diagnostics	● Energy saving control ● Simple magnetic flux vector control ● V/f control ● Traverse function ● Switch motor to direct mains operation ● Special function for the water and HVAC application ● Regeneration avoidance function ● Flying start ● Life time diagnostics ● Integrated PLC function ● Integrated BACNet ● Pre-charge function	● Torque control ● Positon control ● Real Sensorless Vector Control ● Closed loop vector control ● Integrated PLC function ● Easy gain tuning ● Life time diagnostics ● Integrated EMC filter	● Torque control ● Positon control ● Real Sensorless Vector Control ● PM sensorless vector control ● Closed loop vector control ● Safe Torque Off (STO) according EN 61800-5-2 ● Trace function ● Integrated PLC function ● AC & PM Motor autotuning ● Anti sway function ● Easy gain tuning ● Life time diagnostics ● Integrated EMC filter
Specifications	Refer to page 12	Refer to page 16	Refer to page 20	Refer to page 26	Refer to page 32

FR-D700 SC Ultra-compact Standard Inverters

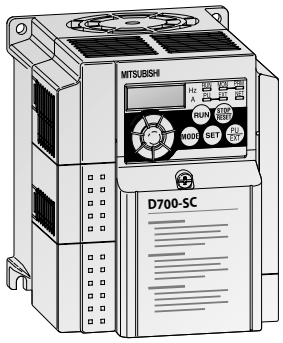

The ultra compact FR-D700 SC series frequency converters excel through their very simple operation whilst still providing many functions.

The spring clamp controller connections version enables simple and fast set-up of the frequency inverter. The FR-D700 SC has an integrated safety stop and internal safety diodes.

The small dimensions render the FR-D700 SC series frequency inverters ideal for use in restricted spaces. New functions such as intermediate circuit control of the ouput frequency, the dancer roll control or the traverse function, facilitate universal use in numerous applications such as

- Pumps
- Fans
- Presses
- Conveyor belts
- Industrial washing machines
- Automatic shelf systems

FR-E700 SC Compact Inverters

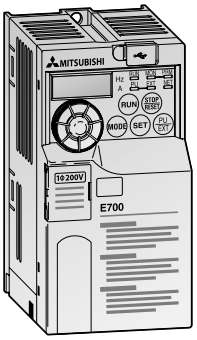

Improved functions and equipment features such as an integrated USB interface, an integrated "digital dial" with display, improved efficiency in the low speed range as well as the possibility of using one of many option cards such as the exchangeable I/O cards, for instance, render the FR-E700 SC a commercial universal genius for many applications, such as:

- Textile machines
- Door and gate actuators
- Elevators
- Cranes
- Material handling systems

FR-F700 Energy Saving Inverters

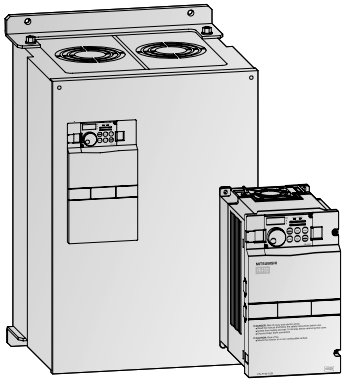

Mitsubishi Electric's FR-F700 series is a range of frequency inverters with truly exceptional power conservation capabilities. Its dedicated functions for water and fan application can always be extended by the built-in PLC function. The inverters of the FR-F740/FR-F746 series are ideal for pumps, ventilation fans and applications with reduced overload requirements such as:

- Air conditioning systems, e.g.in building management
- Air extraction systems
- Fans and blowers
- Hydraulics systems
- Compressors
- Sewage and drains systems
- Ground water pumps
- Heat pumps
- Drive systems with high idling rates

FR-A800 High End Inverters

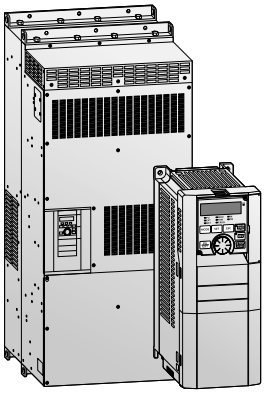

The FR-A800 frequency inverter combines innovative functions and reliable technology with maximum power, economy and flexibility.

The FR-A800 is the appropriate inverter for demanding drive tasks with requirements for precise tourque accuracy and excellent speed control, as well as positioning applications. Its extensive functions including the free programmale PLC function allow adaption to many applications. The outstanding drive features of the FR-A800 suit various needs, such as:

- Cranes and lifting gear
- High-bay warehousing systems
- Extruders
- Winding machines
- Test bench systems
- Chemical machines
- Machine tools
- Conveyor technology
- Printing machines

Intelligent Technology

Compatible with many new applications

- PID control
  The integrated PID control for example supports a flow control for pumps.
- Torque boost
  Torque boost selection is possible.

Comprehensive protection functions for safe operation

- Built-in electronic overcurrent protection
- Selection of the protection function for automatic retry after alarm occurence.

Safety function "Safe Torque Off" (STO) according EN 61800-5-2

The "Safe Torque Off" function (STO) disconnects the power from the motor and prevents an unexpected re-start. Thereupon the motor coasts to a halt. Compared to the traditional technology with contactors, this integrated Safety function reduces the effort in hardware, wiring and maintenance and offers higher performance and lifetime.

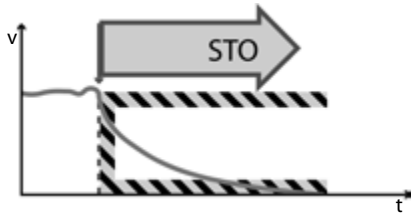

Flexible 5-point V/f curve

The integrated flexible 5-point V/f curve enables you to match the torque curve perfectly to the characteristics of your machine.

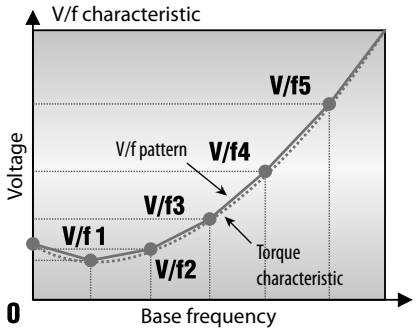

Magnetic flux vector control

The integrated flux vector control of the inverter system makes it possible to achieve high torques, even at low motor speeds.

The sensorless vector control system of the FR-A700 series enables fast, high-precision speed and torque regulation, even when using general-purpose motors without an encoder.

When the FR-A8AP is mounted to the FR-A800, full-scale vector control operation can be performed using a motor with encoder.

Fast response/high accuracy speed control (zero speed control, servo lock), torque control, and position control can be performed. Vector control offers excellent control characteristics when compared to V/f control and other control techniques, achieving the control characteristics equal to those of DC machines.

Compatible with numerous I/Os

- Multi-speed operation
  (15 different pre-selected speeds are available)
- 0/4 to 20 mA and 0 to 5 V DC/
  0 to 10 V DC control input
- Multi-input terminals: selection of different input functions
- Multi-output terminals: selection of different output functions
- 24 V external power supply output
  (permissible values: 24 V DC/0.1 A)

Operating functions and other convenient functions

- Frequency jumps (three points) to avoid the machine's resonant frequency
- Fast acceleration/deceleration mode
- Full monitoring capabilities for monitoring actual operating time and much more
- User-selectable alternative configurations with up to three parameter sets
- Zero current detection

Second electronic thermal function

This function is used to rotate two motors of different rated currents individually by a single inverter.

Regeneration avoidance function

The regeneration avoidance function can prevent the inverter from being shut down by regenerative overvoltages when strong regenerative loads cause power to be released into the frequency inverter (for example when braking the motor or with loads that actively drive the motor).

The inverter can automatically increase the output frequency or disable the braking ramp when a programmed threshold value is reached. The response sensitivity, dynamics and working range are all adjustable.

For example, this function can prevent a shutdown with an overvoltage error when the speed of a fan controlled by the inverter is increased by the draft from another fan operating in the same ventilation duct.

The function then temporarily increases the output frequency above the setpoint value.

This function can also be used to brake loads with the DC bus voltage, without using braking modules.

Automatic restart after instantaneous power failures

In pump and fan applications normal operation can be continued automatically after brief power failures. The system simply reactivates the coasting motor and automatically accelerates it back up to its setpoint speed.

The graphic below shows how the frequency inverter can respond to a brief power outage. Instead of coasting down completely and stopping, the motor is automatically "caught" by the frequency inverter and re-accelerated back up to its previous speed.

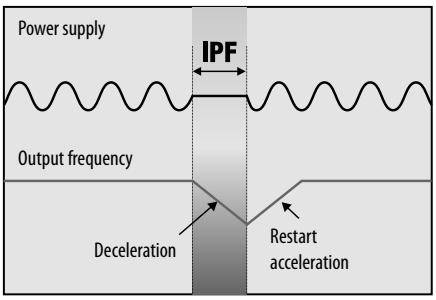

Maintenance timer

The maintenance timer function can be used to monitor the service life of different components.

Power regeneration

The FR-A741 is equipped with power regeneration function for improving braking performance. Feeding the energy generated by braking back into the power grid generates much less heat than a braking resistor. In addition to cutting power consumption this also reduces installation space requirements by eliminating the need for cooling hardware.

The energy fed back into the grid can also be used for other purposes, reducing operating costs still further. The integrated power regeneration function makes it possible to use smaller and much less expensive drive systems and enables simpler and more compact switchgear cabinet layouts.

Special Features for FR-A800

PM sensorless vector control

- What is a permanent magnet (PM) motor?

A PM motor is a synchronous motor with strong permanent magnets embedded in its rotor. The two major PM motor types are: the interior permanent magnet (IPM) motor with its magnets embedded inside the rotor, and the surface permanent magnet (SPM) motor with its permanent magnets attached on the rotor surface.

- What is PM sensorless vector control?

The speed and magnetic pole positions, the two essential bits of information to control a PM motor, are detected without a sensor (encoder). The speed detection internally-performed in an inverter enables highly accurate control of a PM motor, almost as accurate as an AC servo system, without the need of a sensor (encoder).

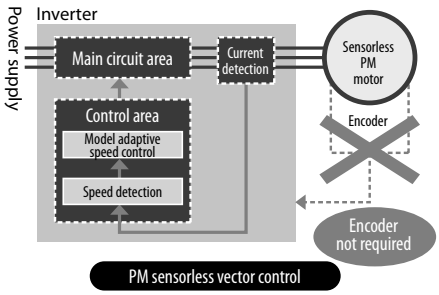

The cutting-edge auto tuning function

- Connect any motor

The PM motor auto tuning function, which has been newly developed, enables operation of other manufacturers' permanent magnet (PM) motors. Induction and synchronous motors by Mitsubishi Electric and by other manufactures are all operable. That means you need less motors for spare and stocks.

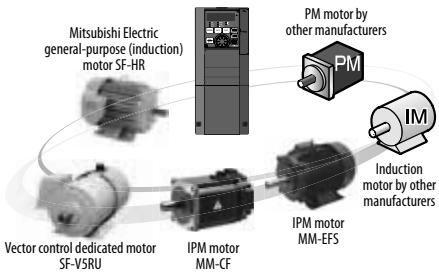

- Sharing the spare inverter

One spare inverter is enough for the two types of motors (IM and PM); the number of required spare inverters is halved.

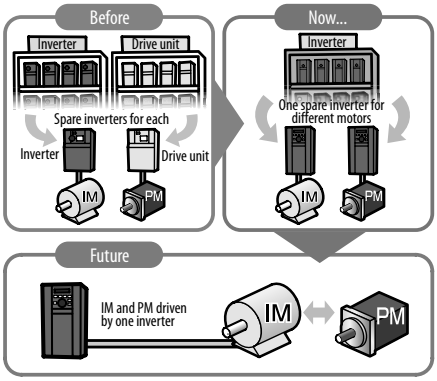

Leading drive performance

The FR-A800 series is equipped with a state-of-the-art high-speed processor developed by Mitsubishi Electric.

This processor enables:

- Vector control up to 400 Hz
- Response time of 2–3 ms
- 200 % starting torque

Easy fault diagnosis

The operating status, including output frequency, immediately before an activation of a protective function is memorized (trace function). The memorized data (trace data) can be read out using a USB memory device and FR Configurator2. Trouble analysis can now be performed at a remote place.

Clock setting is now available in addition to the already-available cumulative energization time. The time and date at a protective function activation are easily identified. (The clock is reset at power-OFF.) The date and time are also saved with the trace data, making the fault analysis easier. Real Time clock is also available with the optional FR-LU08 (to be released soon). The real-time clock is not reset even at power-OFF.

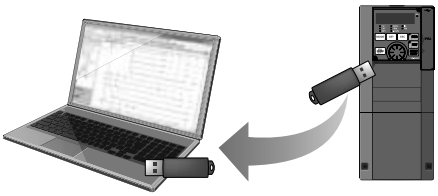

Standard 24 V DC power supply for the control circuit

With the existing control power supply to R1 and S1, 24 V DC input is equipped as standard. Parameters can be set and communication maintained with a 24 V DC power supply even with the high-voltage main power supply turned OFF to facilitate safe maintenance.

The memorized operating status includes the output frequency, etc.

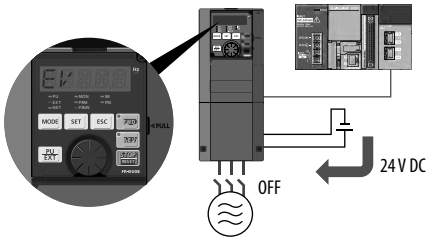

Parameter setting protection with password function

Parameter reading and writing can be restricted by setting a 4-digit password, thus eliminating the need to rewrite parameter settings due to misoperation.

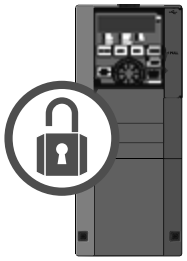

Surrounding air temperature measured by inverter

You can easily select the installation method and determine whether the operating conditions are acceptable.

If the surrounding air temperature exceeds the specified range, a warning is issued and the temperature at a warning occurrence is recorded, helping to prevent trouble.

Ready for crane applications due to

- Built-in 100 % ED brake transistor
- Anti sway function
- Control of 2 motors
- Zero speed torque

Braking without resistor

The inverter applies over excitation current to the motor, in order to convert regenerative energy during deceleration without a brake resistor.

Communication

Extended I/Os for additional control functions

The following I/Os are included as standard equipment on the inverters. The number of I/Os depends on the inverter model.

- Digital inputs
- Analog inputs
- Open collector outputs
- Relay outputs
- Analog outputs

The digital inputs, open collector outputs and relay outputs can all be used for a wide range of functions.

The switching status of the input and output terminals can be displayed on the control panel.

In addition the FR-A800 is equipped with a pulse input for positioning.

Remote I/Os

Instead of using the remote I/Os of a PLC you can use a network connection to read out the status of the frequency inverter's inputs and set its outputs.

Expansion slot

The frequency inverters have up to 3 expansion slots (except FR-D700 SC) that can be used to install an I/O expansion module or a network module. These modules are cards that are installed by plugging them into the slot of the inverter.

Communications capability as a standard function

An RS485 interface (Mitsubishi Electric inverter protocol, Modbus-RTU protocol) for data communications is standard equipment of all inverters. The interface serves for data exchange for example with a personal computer. It is also possible to connect the inverter via USB.

Support for integration in larger networks

Open communications with standard industrial bus systems can be implemented easily with optional expansion cards (except FR-D700 SC).

This makes it possible to integrate the frequency inverter in large-scale automation systems.

The following networks are supported by the inverters:

- CC-Link
- CC-Link IE Field
- LonWorks
- Profibus DP
- Profibus DPV1
- Profinet
- DeviceNet
- SSCNETIII/H
- Ethernet
- Ethernet IP
- BACnet

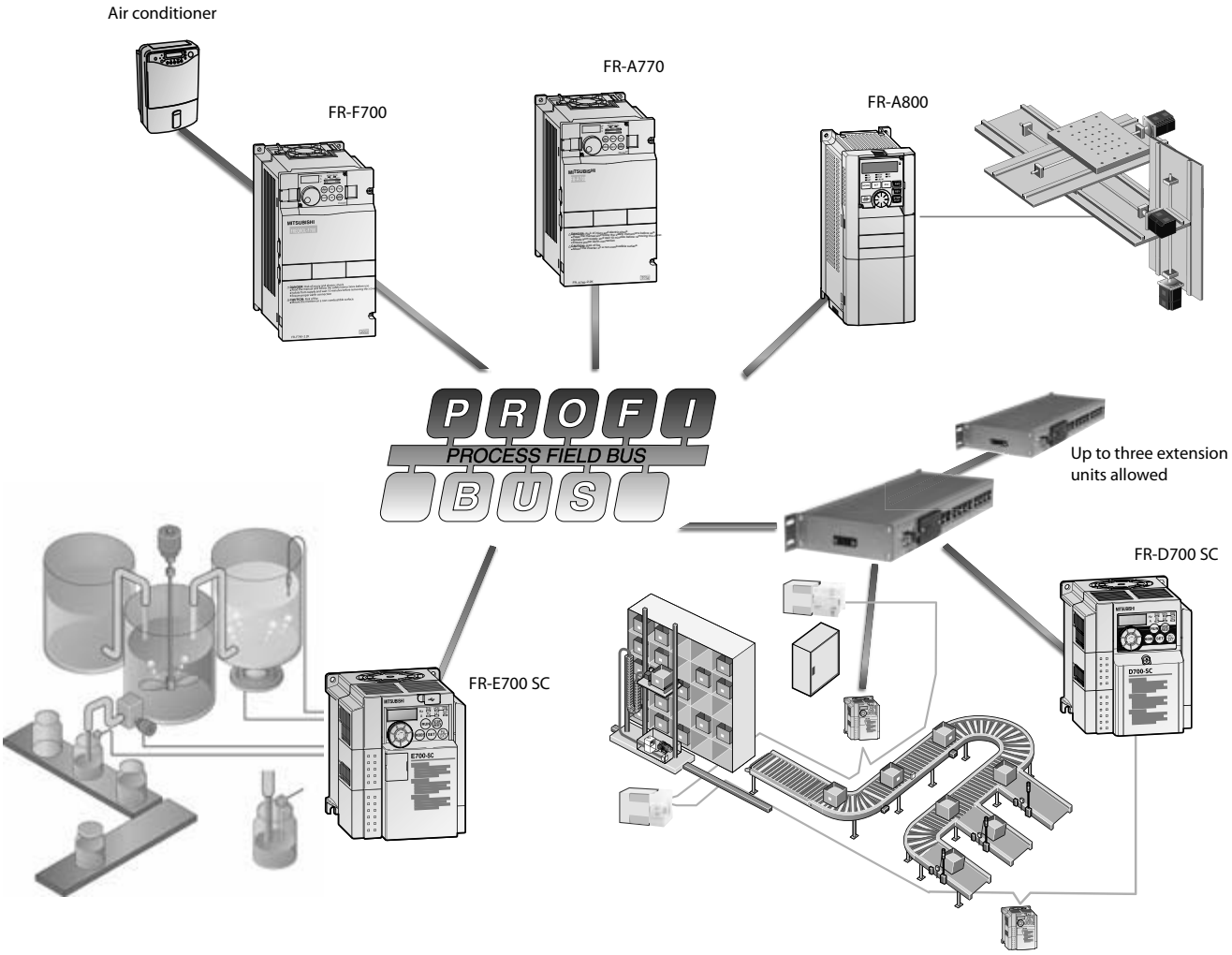

User-friendly Operation

Easy configuration with parameter unit

The parameter unit FR-DU07 is included as standard equipment with the inverters FR-F700 and FR-A700. The FR-D700 SC and FR-E700 SC are equipped with an integrated operation panel. All these panels use a digital dial for making the settings. For the FR-D700 SC and FR-E700 SC the parameter unit FR-PA07 is optional.

The parameter unit makes operation of the inverter simple and intuitive and displays operating parameters and alarm messages. The integrated digital dial control provides fast and efficient access to all key drive parameters.

The optional FR-PU07 parameter unit features a long-life LC display with a backlight and integrated numeric keypad for direct entry of operating parameters. The user interface can be displayed in eight different languages. This panel is designed as a remote unit that is connected to the inverter with a cable.

For FR-F700/FR-A700 inverters a fixed installation is also possible. It also supports definition of user groups. Editable parameter sets can be implemented, which can be selected according to specific application requirements.

FR-DU07

FR-PU07

Easy-to-read operation panel (FR-A800 series)

The parameter unit FR-DU08 is the standard equipment for all FR-A800 inverters. A 5-digit 12-segment display is employed for the operation panel to provide an easy-to-follow view to the users. The operation panel equipped with an LCD panel (FR-LU08) is optionally available for an enhanced display.

The FR-LU08 supports up to

- 5 lines of text or trend graphs
- Start up wizard
- Real Time clock with Battery buffer
- "HELP" button for Parameter explanation
- Exchange of language packs or up/download of Parameter files by the integrated USB port.
- USB connection with PC
- Direct setting for PID set-point
- Unit indicator for the application
- Display of process values in selctable units e.g. m/s, bar, ppm etc.

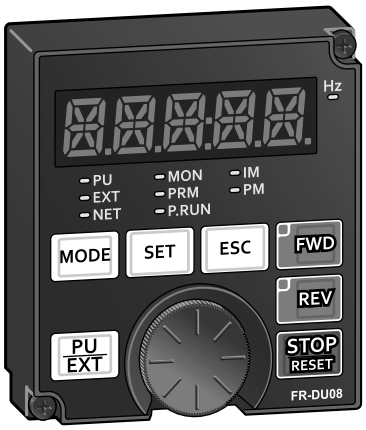

FR-DU08 12-segment type

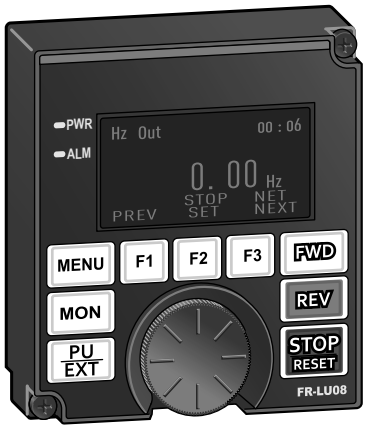

FR-LU08 LCD type (option)

Setting Example with FR-DU07

User-friendly

In addition to allowing you to enter and display configuration and control parameters the integrated operation panel can also be used to monitor and display current operating data and alarm messages. The information is output on a 4-digit LED display.

You can monitor all the current status parameters of both the inverter itself and the connected motor. Problems and malfunctions are indicated by error codes.

One-touch operation

Simple and intuitive configuration and operation save time and money. The control panel's jog shuttle "digital dial" control provides much faster access to all key drive parameters than would be possible with conventional buttons and keys.

You can also use the dial to continuously adjust the speed of the connected motor.

Example: Adjusting a parameter with the jog shuttle

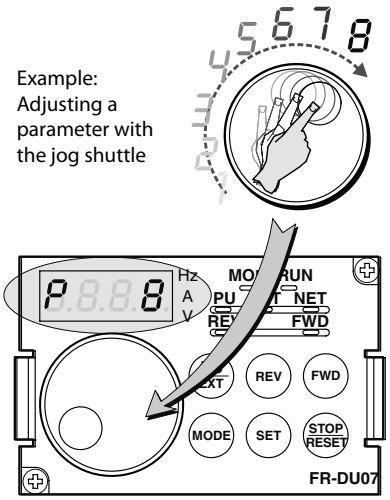

Removable panel with parameter copy function

The control panel (except for FR-D700 SC/ FR-E700 SC) is removable and can also be installed for remote operation, e. g. in the door of a switchgear cabinet. It also features a useful copy function with which you can copy the parameter settings of one frequency inverter to another.

Alarm log

The control panel stores an alarm log for up to 8 alarm messages that can be displayed and checked on the panel. The alarm details in the log include frequency, current, voltage and cumulative operating time at the time of the alarm.

Switch between direct and external control

The frequency inverter can be controlled directly via the operation panel (PU mode) or via external signals (EXT mode).

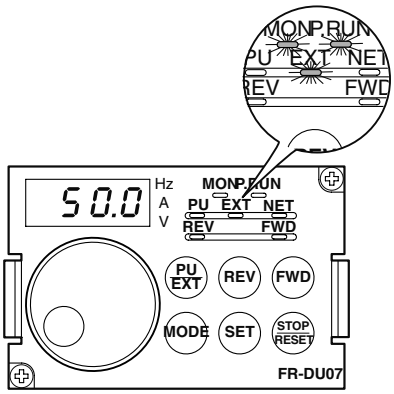

Easy Setup with FR Configurator

In addition to parameter unit operation the frequency inverter can also be connected to a standard PC by serial or USB and for comissioning during start up. Using this software you can configure, operate and monitor multiple frequency inverters, either in a network or directly from a single PC. 700 series inverter are managed by FR Configurator.

FR Configurator2 support inverter of 800 series. 500 and 700 generation products will be supported soon, including e.g. Parameter conversion.

FR Configurator2 features

- Full version of Mitsubishi Electric PLC programming SW
- High-speed oscilloscope function (4 analog/4 digital)
- Trace function for easy machine analysis
- Visualisation of recorded information by datalogger
- Easy upgrade from previous inverters by Parameter convert function

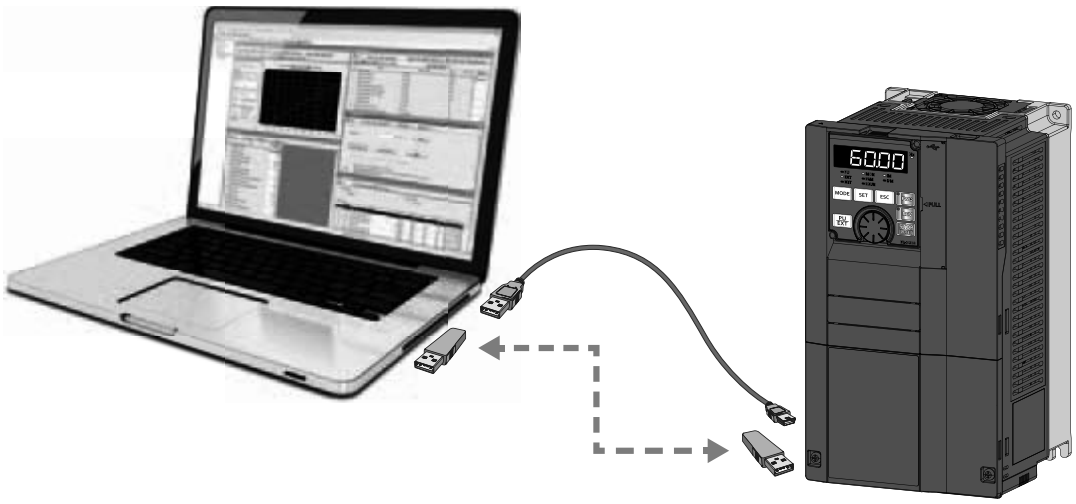

Maintenance and Standards

Simplified Maintenance

Easy installation and maintenance

Since the control and power terminal block is easy to access, the installation and maintenance of the inverter is also very easy.

All connection points are designed as screw terminals (FR-F700/FR-A700) or spring clamps. The housing includes a cable routing facility which can be removed for installing.

Easy access to cooling fans

The easily accessible cooling fans can be replaced quickly and easily, if required.

The integrated cooling fan can be switched OFF automatically in stand-by operation to increase its lifetime significantly.

Service timer

The frequency inverters offer up to 3 integrated service timers that automatically triggers an diagnostic alarm after a set number of operating hours. This feature can be used for monitoring the frequency inverter itself or a peripheral component. The values of the average output current and the service timer can also be output as analog signals.

Modern diagnostics functions further extend service life

The ageing of the main circuit capacitors, the control circuit power capacitor, the internal cooling fans and the inrush current limiter circuit can be checked with the monitoring functions.

If the inrush resistor overheats an alarm is displayed.

The alarms for the main circuit capacitors, control circuit capacitor, inrush current limiter and internal fans can all be output to a network or via the optional FR-A7AY module.

This makes it possible to prevent malfunctions by configuring diagnostics alarms to be triggered when the end of the service life is reached.

The inverter also has an internal program that can evaluate the ageing of the main circuit capacitors. This feature is only available when a motor is connected to the inverter.

Due to built-in enviroment temperature sensor the real cooling situation can be judged more precice and e.g IGBT overtemperature alarms can be avoided.

Environment-Friendly and International Compliance

Electromagnetic compatibility

Latest technologies have been used to significantly reduce the interference levels generated by this frequency inverter.

Regarding its electromagnetic compatibility the frequency inverters complies with the European EMC directives.

To meet these standards noise filters have been developed for each performace range.

The FR-F700 and FR-A800 have a built-in EMC filter and comply to the strict electromagnetic compatibility regulations of the European Union (EMC Directive, Environment 2, EN 61800-3).

In order to meet these standards the inverters are fitted with a new, integrated interference suppression filter, which can easily be deactivated with a jumper if necessary.

You can also further limit the make current and reduce network interference by fitting the input of the inverter with an optional AC choke and a DC choke, which is connected to special terminals on the inverter unit.

Circuit boards with two coats of protective varnish

The frequency inverters with the E1 designation (standard, type 01800 and above) have circuit boards with two coats of protective varnish.

This feature is available as an option for the models up to type 01160. The twin coating on the internal PCBs provides even better protection against environmental influences. This is particularly important in applications sewage plants where the switchgear cabinets are exposed to aggressive fermentation gases that can reduce the service life of the equipment.

The FR-A800 series complies to the Enviromental requirements of IEC60721-3-3 level 3C2 as standard.

International standards

The inverters are designed so that they can be used worldwide without any additional modifications or certifications.

- The units conform to the international standards CE, UL, cUL, Gost, CCC, ISO 9001, ISO 14001, EAC and C-Tick (FR-A741: CE/UL/cUL/GOST). In addition the series FR-F700 and FR-A800 (coming soon) conform to DNV standards.
- User-selectable positive or negative switching logic. Users can select positive or negative switching logic for input and output signals, enabling flexible and simple adaptation of the units for varying world market requirements.
- Multilingual programming/control unit (optional)
- Support for a variety of international industrial bus systems
- Internationally standardised, frequency inverter configuration software package for MS Windows, with multilingual user interface

These features make the inverters a truly international product that meets all relevant standards and can be easily adjusted for national requirements.

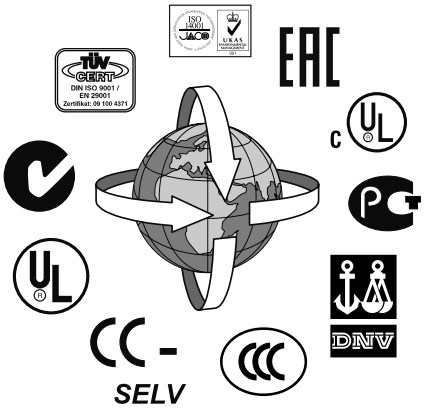

The FR-D700 SC Series

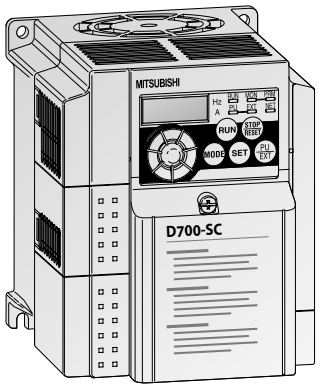

The FR-D700 SC is a pace-setter in the miniature drive system class. It features ultra-compact dimensions, simple and secure operation and a wide range of technology functions. The integrated digital dial gives the user fast, direct access to all important drive parameters.

Output range:

FR-D720S SC:
0.1–2.2 kW, 200–240 V AC, single-phase

FR-D740 SC:
0.4–7.5 kW, 380–480 V AC, three-phase

Available accessories:

Optional control units, versatile options and useful accessories are available for this frequency inverter.

Please refer to page 48 for details.

Technical Details FR-D700 SC

Product line			FR-D720S-□-SC-EC/-E6						FR-D740-□-SC-EC/-E6						
			008	014	025	042	070	100	012	022	036	050	080	120	160
Output	Rated motor capacity ①	kW	0.1	0.2	0.4	0.75	1.5	2.2	0.4 (0.55)	0.75 (1.1)	1.5 (2.2)	2.2 (3)	3.7 (4)	5.5 (7.5)	7.5 (11)
	Rated output capacity ②	kVA	0.3	0.5	1.0	1.6	2.8	3.8	1.2	2.0	3.0	4.6	7.2	9.1	13.0
	Rated current ③	A	0.8	1.4	2.5	4.2	7.0	10.0	1.2 (1.4)	2.2 (2.6)	3.6 (4.3)	5.0 (6.0)	8.0 (9.6)	12.0 (14.4)	16.0 (19.2)
	Overload capacity ④		150 % of rated motor capacity for 60 s; 200 % for 0.5 s												
	Voltage ⑤		3-phase AC, 0 V to power supply voltage												
	Frequency range	Hz	0.2–400												
	Control method		V/f control, optimum excitation control or general-purpose magnetic flux vector control												
	Modulation control		Sine evaluated PWM, soft PWM												
	Brake transistor		—		Built-in										
	Maximum brake torque with FR-ABR(H) option		100 % torque/10 % ED												
Input	Power supply voltage		1-phase, 200–240 V AC, -15 %/+10 %						3-phase, 380–480 V AC, -15 %/+10 %						
	Voltage range		170–264 V AC at 50/60 Hz						325–528 V AC at 50/60 Hz						
	Power supply frequency		50/60 Hz ±5 %												
	Rated input capacity ⑥	kVA	0.5	0.9	1.5	2.3	4.0	5.2	1.5	2.5	4.5	5.5	9.5	12	17
Control	PWM switching frequency		0.7–14.5 kHz, user adjustable												
	Frequency resolution	Analog	0.06 Hz/0–50 Hz (terminal 2, 4: 0–10 V/10 Bit) 0.12 Hz/0–50 Hz (terminal 2, 4: 0–5 V/9 Bit 0.06 Hz/0–50 Hz (terminal 4: 0–20 mA/10 Bit)												
		Digital	0.01 Hz												
	Frequency precision		±1 % of max. output frequency (temperature range 25 °C ±10 °C) during analog input; ±0.01 % of max. output frequency during digital input (set via Digital Dial)												
	Voltage/frequency characteristics		Base frequency adjustable from 0 to 400 Hz Constant torque/variable torque pattern can be selected												
	Possible starting torque		≥150 %/1 Hz (for vector control oder slip compensation)												
	Torque boost		Manual torque boost												
	Acceleration/deceleration time		0.1 to 3600 s (may be set individually for acceleration and deceleration)												
	Acceleration/deceleration characteristics		Linear or S-pattern acceleration/deceleration mode selectable												
	Braking torque	DC braking	Operating frequency: 0–120 Hz, operating time: 0–10 s, voltage: 0–30 % (externally adjustable)												
	Current stall prevention operation level		Operation current level setting 0–200 %, user adjustable												
	Motor protection		Electronic motor protection relay (rated current user adjustable)												

Remarks:
Explanation for ① to ⑥ see next page.

Product line			FR-D720S-□-SC-EC/-E6						FR-D740-□-SC-EC/-E6						
			008	014	025	042	070	100	012	022	036	050	080	120	160
Control signals for operation	Frequency setting signal	Analog input	Terminal 2: 0–5 V DC, 0–10 V DC Terminal 4: 0–5 V DC, 0–10 V DC, 0/4–20 mA												
		Digital input	Entered from operation panel or parameter unit. Frequency setting increment is selectable.												
	Operation functions		Maximum/minimum frequency setting, frequency jump operation, external thermal relay input selection, automatic restart after instantaneous power failure operation, forward/reverse rotation prevention, remote setting, second function, multi-speed operation, regeneration avoidance, slip compensation, operation mode selection, offline auto tuning function, PID control, computer link operation (RS485), optimum excitation control, power failure stop, speed smoothing control, Modbus-RTU												
Control signals for operation	Input signals		Any of 5 signals can be selected using parameters 178 to 182 (input terminal function selection): multi-speed selection, remote setting, second function selection, terminal 4 input selection, JOG operation selection, PID control valid terminal, external thermal input, PU-external operation switchover, V/f switchover, output stop, start self-holding selection, traverse function selection, forward rotation, reverse rotation command, inverter reset, PU-NET operation switchover, external-NET operation switchover, command source switchover, inverter operation enable signal, and PU operation external interlock												
	Output signals	Operating status	Can be selected using parameters 190 and 192 (output terminal function selection): inverter operation, up-to-frequency, overload alarm, output frequency detection, regenerative brake prealarm, electronic thermal relay function prealarm, inverter operation ready, output current detection, zero current detection, PID lower limit, PID upper limit, PID forward/reverse rotation output, fan alarm ⑦, heatsink overheat pre-alarm, deceleration at an instantaneous power failure, PID control activated, safety monitor output, safety monitor output 2, during retry, life alarm, fault output 3, current average value monitor, maintenance timer alarm, remote output, alarm output, fault output												
		Analog signal	0–10 V DC												
Display option	Displays on operation panel or parameter unit (FR-PU07)	Operating status	Output frequency, motor current (steady), output voltage, frequency setting, cumulative energization time, actual operation time, converter output voltage, regenerative brake duty, electronic thermal relay function load factor, output current peak value, converter output voltage peak value, motor load factor, PID set point, PID measured value, PID deviation, inverter I/O terminal monitor, output power, cumulative power, motor thermal load factor, inverter thermal load factor, PTC thermistor resistance.												
		Alarm display	Fault definition is displayed when the fault occurs and the past 8 fault definitions (output voltage/current/frequency/cumulative energization time right before the fault occurs) are stored.												
	Additional displays on parameter unit FR-PU07	Operating status	Not used												
		Interactive guidance	Interactive guide for operation and troubleshooting via help function												
Protection	Functions		Overcurrent during acceleration, overcurrent during constant speed, overcurrent during deceleration, overvoltage during acceleration, overvoltage during constant speed, overvoltage during deceleration, inverter protection thermal operation, motor protection thermal operation, heatsink overheat, input phase failure ⑦, output side earth (ground) fault overcurrent at start ⑨, output phase failure, external thermal relay operation ⑨, PTC thermistor operation ⑨, parameter error, PU disconnection, retry count excess ⑧, CPU fault, brake transistor alarm, inrush resistance overheat, analog input error, stall prevention operation, output current detection value exceeded, safety circuit fault, fan alarm ⑦, overcurrent stall prevention, overvoltage stall prevention, PU stop, parameter write error, regenerative brake prealarm, electronic thermal relay function prealarm, maintenance output, undervoltage, operation panel lock, password locked, inverter reset, safety torque off												
	Protective structure		IP20												
Others	Cooling		Self cooling				Fan cooling		Self cooling		Fan cooling				
	Power loss	W	14	20	32	50	80	110	40	55	90	100	180	240	280
	Weight	kg	0.5	0.6	0.9	1.1	1.5	1.9	1.2	1.2	1.3	1.4	1.5	3.1	3.1
	Dimensions (WxHxD)	mm	68x128x80.5		68x128 x142.5	68x128 x162.5	108x128 x155	140x150 x145	108x128x129.5		108x128 x135.5	108x128 x155.5	108x128 x165.5	220x150x155	
Order information	Single painted PCB(EC)	Art. no.	247595	247596	247597	247598	247599	247600	247601	247602	247603	247604	247605	247606	247607
	Double painted PCB (E6)	Art. no.	266097	266098	266099	266100	266100	266102	266103	266104	266135	266136	266137	266137	266139

Remarks:
① The applied motor capacity indicated is the maximum capacity applicable for use of the Mitsubishi Electric 4-pole standard motor. The motor capacity ratings in brackets are for ambient temperatures up to 40 °C.
② The specifications of the rated output capacity are related to a motor voltage of 440 V.
③ The rated output current in brackets are for ambient temperatures up to 40 °C.
④ The % value of the overload capacity indicated is the ratio of the overload current to the inverter's rated output current. For repeated duty, allow time for the inverter and motor to return to or below the temperatures under 100 % load.
⑤ The maximum output voltage does not exceed the power supply voltage. The maximum output voltage can be changed within the setting range. However, the pulse voltage value of the inverter output side voltage remains unchanged at about √2 that of the power supply.
⑥ The power supply capacity varies with the value of the power supply side inverter impedance (including those of the input choke and cables).
⑦ FR-D720S-070SC or above, FR-D740-036SC or above
⑧ This protective function is available with the three-phase power input specification model only.
⑨ This protective function does not function in the initial status.
For overseas types refer to page 92.

Block Diagram FR-D700 SC

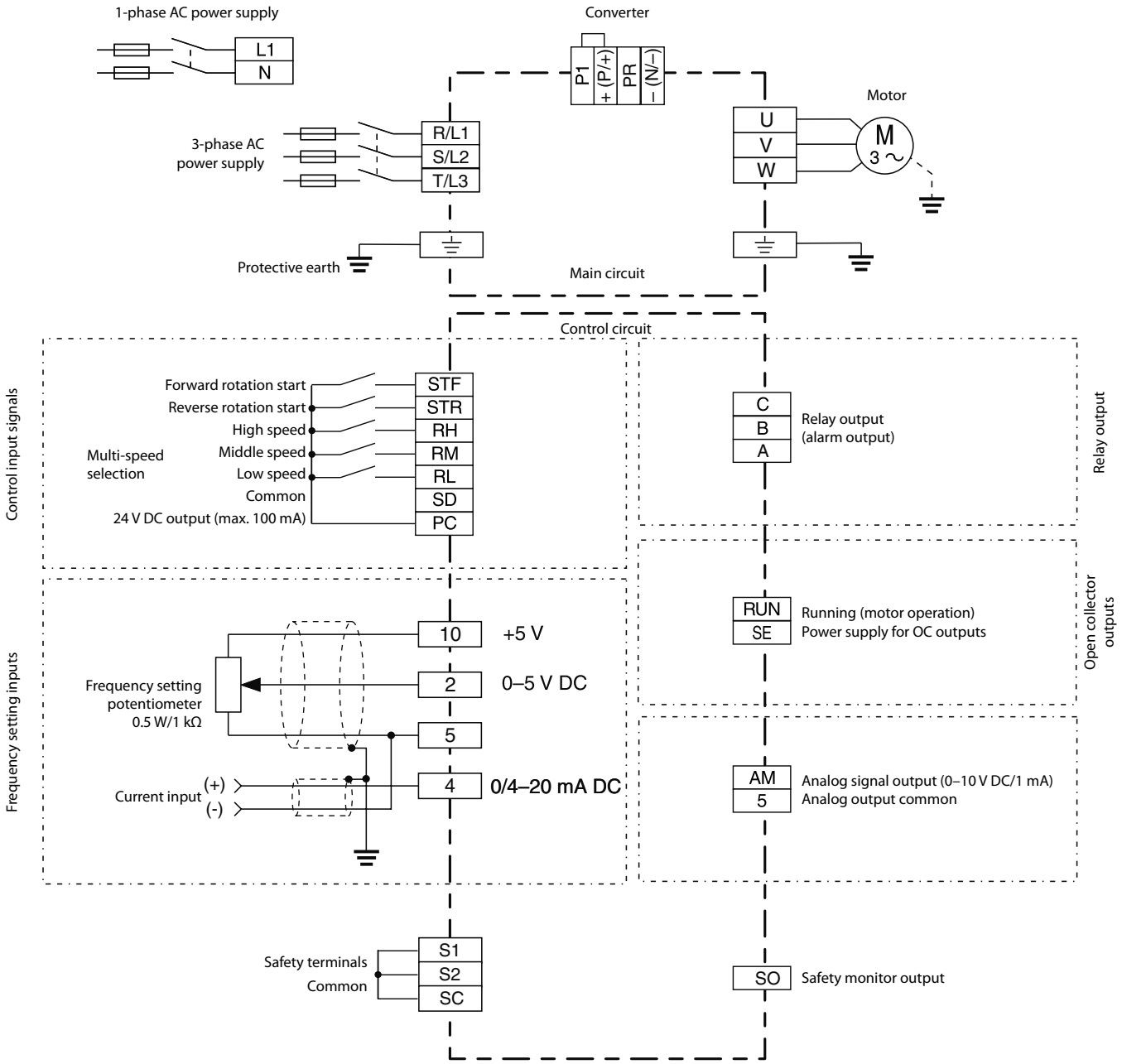

Assignment of Signal Terminals

Function	Terminal	Designation	
Control connection	STF	Forward rotation start	The motor rotates forward, if a signal is applied to terminal STF. If the signals STF and STR are applied simultaneously, the STOP command is given.
	STR	Reverse rotation start	The motor rotates reverse, if a signal is applied to terminal STR. If the signals STF and STR are applied simultaneously, the STOP command is given.
	RH, RM, RL	Multi-speed selection	Preset of 15 different output frequencies; programmable.
Common	SD	Contact input common (sink) 24 V DC power supply common	A determined control function is activated, if the corresponding terminal is connected to the terminal SD (sink logic). The SD terminal is isolated from the digital circuits via optocouplers. When connecting the transistor output (open collector output), such as a programmable controller (PLC), connect the negative external power supply for transistor output to this terminal to prevent a malfunction caused by undesirable currents. When source logic has been selected, connect this terminal with 0 V of the external power supply.
	PC	Contact input common (source) 24 V DC power supply	24 V DC/0.1 A output In sink logic, when activated by open collector transistors (e.g. PLC) the positive pole of an external power supply has to be connected to the PC terminal. In source logic, the PC terminal serves as common reference point for the control inputs.
Setting value specification	10	Voltage output for potentiometer	Output voltage 5 V DC. Max. output current 10 mA Recommended potentiometer: 1 kΩ, 0.5 W linear (multi-turn potentiometer)
	2	Input for frequency setting value signal	The voltage setting value 0–5 (10) V is applied to this terminal. The voltage range is preset to 0–5 V. The input resistance is 10 kΩ ±1kΩ. The maximum permitted voltage is 20 V DC.
	5	Reference point for frequency setting value signal	Terminal 5 is the reference point for all analog setting values and for the analog output signal AM. The terminal is isolated from the reference potential of the control circuit and should not be earthed for reasons of noise immunity.
	4	Input for current setting value signal	Inputting 4–20 mA DC (or 0–5 V, 0–10 V) provides the maximum output frequency at 20 mA and makes input and output proportional. This input signal is valid only when the AU signal is on (terminal 2 input is invalid). Use Pr. 267 to switch from among input 4 to 20 mA (initial setting), 0–5 V DC and 0–10 V DC. Set the voltage/current input switch in the "V" position to select voltage input (0–5 V/0–10 V).
Signal outputs	A, B, C	Relay output (alarm output)	The alarm is output via relay contacts (C-B = normally open, C-A = normally closed). The maximum contact load is 230 V AC/0.3 A or 30 V DC/0.3 A.
	RUN	Signal output for motor operation	Switched low (voltage of terminal SE is output) when the inverter output frequency is equal to or higher than the starting frequency (initial value 0.5 Hz). Switched high during stop or DC injection brake operation. (Low indicates that the open collector output transistor is on (conducts). High indicates that the transistor is off (does not conduct).) Permissible load 24 V DC (maximum 27 V DC)/0.1 A (a voltage drop is 3.4 V maximum when the signal is on).
	SE	Reference potential for signal outputs	Reference potential for the signal RUN. This terminal is isolated from the reference potential of the control circuit 5 and SD.
	AM	Analog voltage output	Select one e.g. output frequency from monitor items. Not output during inverter reset. The output signal is proportional to the magnitude of the corresponding monitoring item. Output item (initial setting): output frequency Output signal 0–10 V DC. Permissible load current 1 mA (load impedance 10 kΩ or more), resolution 8 bit
Interface	—	PU connector (RS485)	Communications via RS485
Safety connection	S1, S2	Safety inputs	When the safety functions are not used, the existing jumpers between the terminals S1-SC and S2-SC must not be removed, otherwise an operation of the frequency inverter is not possible.
	SC	Reference potential for safety inputs	
	SO	Safety monitor output	

Assignment of Main Circuit Terminals

Function	Terminal	Designation	Description
Main circuit connection	L1, N	Power supply 1-phase	Connect to the commercial power supply. Keep these terminals open when using the Harmonic Converter (FR-HC) or power regeneration common converter (FR-CV).
	R/L1, S/L2, T/L3	Power supply 3-phase	
	+ (P/+), – (N/–)	External brake unit connection	Connect the brake unit (FR-BU2), power regeneration common converter (FR-CV) or the Harmonic Converter (FR-HC) to the terminals + (P/+) and – (N/–).
	+ (P/+), P1	DC choke connection	An optional DC choke can be connected to the terminals P1 and + (P/+). Before connecting the DC choke, disconnect the jumper from terminals P1 and + (P/+).
	+ (P/+), PR	External brake resistor connection	Connect a brake transistor (FR-ABR, MRS) across terminals + (P/+) and PR. (The brake resistor can not be connected to the FR-D720S-008 and 014.)
	U, V, W	Motor connection	Voltage output of the inverter (3-phase, 0 V up to input voltage, 0.2–400 Hz)
	⏚	PE	Protective earth connection of inverter

The FR-E700 SC Series

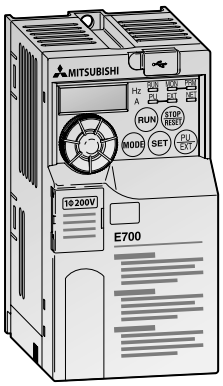

The FR-E700 SC series with SLV control sets new standards for compact vector-controlled drive systems. The inverters of the FR-E700 SC series are exceptionally versatile and powerful, packed with advanced features like the Soft PWM system for reducing motor noise, adjustable torque limiting, automatic motor configuration and an integrated brake transistor (except FR-E720S-008SC and 015SC). Additionally the FR-E700 SC has the security function "Safety stop and Safe Torque Off" respectively (STO) conforming to EN 61800-5-2.

Output range:

FR-E720S SC:
0.1–2.2 kW, 200–240 V AC, single-phase

FR-E740 SC:
0.4–15 kW, 380–480 V AC, three-phase

Available accessories:

Optional control units, versatile options and useful accessories are available for this frequency inverter.

Please refer to page 48 for details.

Technical Details FR-E700 SC

Product line			FR-E720S-□SC-EC/-E6						FR-E740-□SC-EC/-E6								
			008	015	030	050	080	110	016	026	040	060	095	120	170	230	300
Output	Rated motor capacity ①	kW	0.1	0.2	0.4	0.75	1.5	2.2	0.4	0.75	1.5	2.2	3.7	5.5	7.5	11	15
	Rated output capacity ②	kVA	0.3	0.6	1.2	2	3.2	4.4	1.2	2	3	4.6	7.2	9.1	13	17.5	23
	Rated current ③	A	0.8 (0.8)	1.5 (1.4)	3 (2.5)	5 (4.1)	8 (7)	11 (10)	1.6 (1.4)	2.6 (2.2)	4 (3.8)	6 (5.4)	9.5 (8.7)	12	17	23	30
	Overload capacity ④		150 % of rated motor capacity for 60 s; 200 % for 3 s														
	Voltage ⑤		3-phase AC, 0 V to power supply voltage						3-phase, 0 V up to power supply voltage								
	Frequency range	Hz	0.2–400														
	Control method		V/f control, optimum excitation control, general-purpose magnetic flux vector control or advanced magnetic flux vector control														
	Modulation control		Sine evaluated PWM, soft PWM														
	Brake transistor		—		Built-in												
	Maximum brake torque	regenerative ⑥	150 %		100 %		50 %	20 %	100 %		50 %	20 %					
		with FR-ABR(H) option	100 % torque/10 % ED													100 % torque/ 6 % ED	
Input	Power supply voltage		1-phase, 200–240 V AC, -15 %/+10 %						3-phase, 380–480 V AC, -15 %/+10 %								
	Voltage range		170–264 V AC at 50/60 Hz						325–528 V AC at 50/60 Hz								
	Power supply frequency		50/60 Hz ±5 %														
	Rated input capacity ⑦	kVA	0.5	0.9	1.5	2.5	4	5.2	1.5	2.5	4.5	5.5	9.5	12	17	20	28
Control	Carrier frequency		0.7–14.5 kHz (user adjustable)														
	Frequency resolution	Analog	0.06 Hz/0–50 Hz (terminal 2, 4: 0–10 V/10 Bit) 0.12 Hz/0–50 Hz (terminal 2, 4: 0–5 V/9 Bit) 0.06 Hz/0–50 Hz (terminal 4: 4–20 mA/10 Bit)														
		Digital	0.01 Hz														
	Frequency precision		±0.5 % of max. output frequency (temperature range 25 °C ±10 °C) during analog input; ±0.01 % of max. output frequency during digital input														
	Voltage/frequency characteristics		Base frequency adjustable from 0 to 400 Hz; Constant torque/variable torque pattern can be selected														
	Possible starting torque		≥200 %/0.5 Hz when advanced magnetic flux vector control is set (3.7 K or less)														
	Torque boost		Manual torque boost														
	Acceleration/deceleration time		0.01–360 s, 0.1–3600 s (may be set individually for acceleration and deceleration)														
	Acceleration/deceleration characteristics		Linear or S-pattern acceleration/deceleration mode selectable														
	Braking torque	DC braking	Operating frequency: 0–120 Hz, operating time: 0–10 s, voltage: 0–30 % (externally adjustable)														
	Current stall prevention operation level		Response threshold 0–200 %, user adjustable														
	Motor protection		Electronic motor protection relay (rated current user adjustable)														

Remarks:
Explanation for ① to ⑦ see next page.

Product line			FR-E720S-□SC-EC/-E6						FR-E740-□SC-EC/-E6								
			008	015	030	050	080	110	016	026	040	060	095	120	170	230	300
Control signals for operation	Frequency setting values	Analog input	Terminal 2: 0–5 V DC, 0–10 V DC Terminal 4: 0–5 V DC, 0–10 V DC, 0/4–20 mA														
		Digital input	From operation panel or parameter unit, Frequency setting increment can be set. 4 digit BCD or 16bit binary data (when the option FR-A7AX-Ekit-SC-E is used)														
	Input signals		Any of 7 signals can be selected using parameters 178 to 184 (input terminal function selection): multi-speed selection, remote setting, stop-on contact selection, second function selection, terminal 4 input selection, JOG operation selection, PID control valid terminal, brake opening completion signal, external thermal input, PU-external operation switchover, V/f switchover, output stop, start self-holding selection, forward rotation, reverse rotation command, inverter reset, PU-NET operation switchover, external-NET operation switchover, command source switchover, inverter operation enable signal, PU operation external interlock														
	Operation functions		Maximum/minimum frequency setting, frequency jump operation, external thermal relay input selection, automatic restart after instantaneous power failure operation, forward/reverse rotation prevention, remote setting, brake sequence, second function, multi-speed operation, stop-on contact control, droop control, regeneration avoidance, slip compensation, operation mode selection, offline auto tuning function, PID control, computer link operation (RS485)														
	Safety function "Safe Torque Off"		The signal for the safe shutdown of the output can be applied to the terminals S1 and S2. (in accordance with the safety standards EN ISO 13849-1 category 3, PLd EN62061, IEC61508 SIL2)														
	Output signals	Operating status	Can be selected using parameters 190 to 192 (output terminal function selection): inverter operation, up-to-frequency, overload alarm, output frequency detection, regenerative brake prealarm, electronic thermal relay function prealarm, inverter operation ready, output current detection, zero current detection, PID lower limit, PID upper limit, PID forward/reverse rotation output, brake opening request, fan alarm ⑧, heatsink overheat pre-alarm, deceleration at an instantaneous power failure, PID control activated, safety monitor output, safety monitor output 2, during retry, life alarm, current average value monitor, remote output, alarm output, fault output, fault output 3, maintenance timer alarm.														
		Analog signal	0–10 V DC														
Display option	Display on the operation panel or parameter unit FR-PU07	Operating status	Output frequency, motor current (steady or peak value), output voltage, frequency setting, cumulative energization time, actual operation time, motor torque, converter output voltage (steady or peak value), regenerative brake duty, electronic thermal relay function load factor, output power, cumulative power, motor load factor, PID set point, PID measured value, PID deviation, inverter I/O terminal monitor, I/O terminal option monitor, motor thermal load factor, inverter thermal load factor														
		Alarm display	Fault definition is displayed when the fault occurs and the past 8 fault definitions (output voltage/current/frequency/cumulative energization time right before the fault occurs) are stored.														
	Additional displays on parameter unit FR-PU04/FR-PU07	Operating status	Not used														
		Interactive operating guide ⑨	Interactive guide for operation and troubleshooting via help function														
Protection	Functions		Overcurrent during acceleration, overcurrent during constant speed, overcurrent during deceleration, overvoltage during acceleration, overvoltage during constant speed, overvoltage during deceleration, inverter protection thermal operation, motor protection thermal operation, heatsink overheat, input phase failure, output side earth (ground) fault overcurrent at start, output phase failure, external thermal relay operation ⑩, option unit error ⑩, parameter error, internal board fault, PU disconnection, retry count excess ⑩, CPU fault, brake transistor alarm, inrush resistance overheat, communication error, analog input error, USB communication error, brake sequence error ⑩, safety circuit fault, fan alarm ⑧, overcurrent stall prevention, overvoltage stall prevention, PU stop, parameter write error, regenerative brake prealarm, electronic thermal relay function prealarm, maintenance output, undervoltage, operation panel lock, password locked, inverter reset, safety torque off														
	Protection rating		IP20														
Others	Cooling		Self cooling			Fan cooling			Self cooling		Fan cooling					Self cooling	
	Power loss	W	14	20	32	50	85	115	40	55	90	100	180	240	300	400	500
	Weight	kg	0.6	0.6	0.9	1.4	1.5	2.0	1.4	1.4	1.9	1.9	1.9	3.2	3.2	6.0	6.0
	Dimensions (WxHxD)	mm	68x128x86.5		68x128 x148.5	108x128 x141.5	108x128 x167	140x150 x161.5	140x150x120		140x150x141			220x150x153		220x260x196	
Order information	Single painted PCB	Art. no.	234795	234796	234797	234798	234799	234800	234801	234802	234803	234804	234805	234806	234807	234808	234809
	Double painted PCB (E6)	Art. no.	240974	240975	240976	240977	240978	240979	240980	240981	240982	240983	240984	240985	240986	240987	240988

Remarks:
① The applied motor capacity indicated is the maximum capacity applicable for use of the Mitsubishi Electric 4-pole standard motor.
② The specifications of the rated output capacity are related to a motor voltage of 440 V.
③ Setting 2 kHz or more in Pr. 72 PWM frequency selection to perform low acoustic noise operation with the ambient temperature exceeding 40 °C, the rated output current is the value in parenthesis.
④ The % value of the overload capacity indicated is the ratio of the overload current to the inverter's rated output current. For repeated duty, allow time for the inverter and motor to return to or below the temperatures under 100 % load.
⑤ The maximum output voltage does not exceed the power supply voltage. The maximum output voltage can be changed within the setting range. However, the pulse voltage value of the inverter output side voltage remains unchanged at about √2 that of the power supply.
⑥ The braking torque indicated is a short-duration average torque (which varies with motor loss) when the motor alone is decelerated from 60 Hz in the shortest time and is not a continuous regenerative torque. When the motor is decelerated from the frequency higher than the base frequency, the average deceleration torque will reduce. Since the inverter does not contain a brake resistor, use the optional brake resistor FR-ABR-(H) when regenerative energy is large. A brake unit FR-BU2 or BU2 may also be used. (Option brake resisitor cannot be used for FR-E720S-008SC and 015SC.)
⑦ The power supply capacity varies with the value of the power supply side inverter impedance (including those of the input choke and cables).
⑧ FR-E720S-050SC or above, FR-E740-040SC or above
⑨ This operation guide is only available with option parameter unit (FR-PU07).
⑩ This protective function does not function in the initial status.
For overseas types refer to page 93.

Block Diagram FR-E700 SC

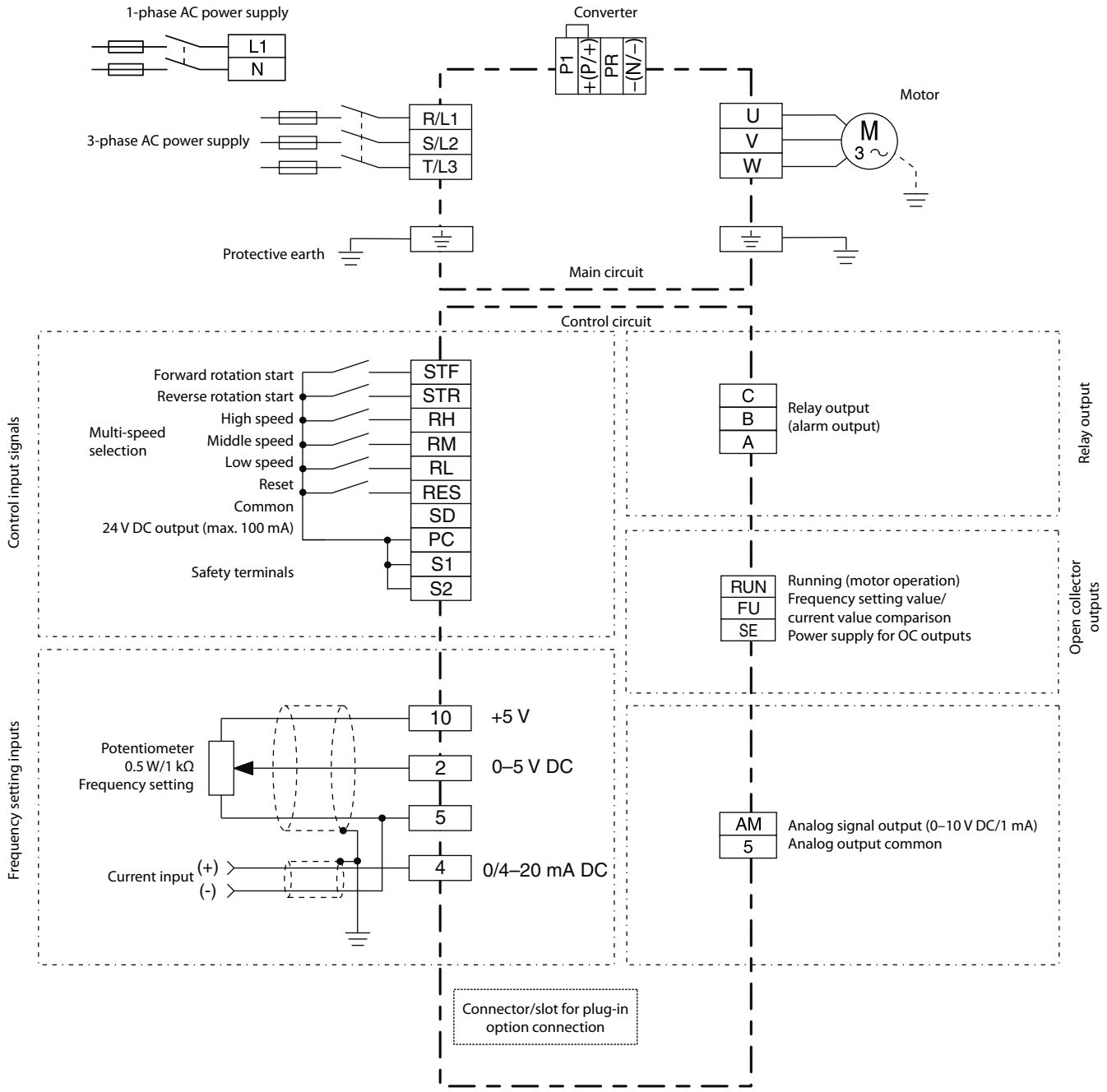

Assignment of Signal Terminals

Function	Terminal	Designation	Description
Control connection	STF	Forward rotation start	The motor rotates forward, if a signal is applied to terminal STF. When the STF and STR signals are turned on simultaneously, the stop command is given.
	STR	Reverse rotation start	The motor rotates reverse, if a signal is applied to terminal STR. When the STF and STR signals are turned on simultaneously, the stop command is given.
	RH, RM, RL	Multi-speed selection	Preset of 15 different output frequencies (fixed frequencies).
	RES	RESET input	Used to reset alarm output provided when protective function is activated. Turn on the RES signal for more than 0.1 s, then turn it off. Initial setting is for reset always. By setting Pr. 75, reset can be set to enabled only at an inverter alarm occurrence. Recover about 1 s after reset is cancelled.
Common	SD	Contact input common (sink) 24 V DC power supply common	A determined control function is activated, if the corresponding terminal is connected to the terminal SD (sink logic). The SD terminal is isolated from the digital circuits via optocouplers. The terminal is isolated from the reference potential of the analog circuit (terminal 5).
	PC	Contact input common (source) 24 V DC power supply	24 V DC/0.1 A output; reference potential for source logic
Setting value specification	10	Voltage output for potentiometer	Output voltage 5 V DC Max. output current 10 mA Recommended potentiometer: 1 kΩ, 0.5 W linear
	2	Input for frequency setting value signal	The voltage setting value 0–5 (10) V is applied to this terminal. The voltage range is preset to 0–5 V. The input resistance is10 kΩ ±1 kΩ.
	5	Reference point for frequency setting value signal	Terminal 5 is the reference point for all analog setting values and for the analog output signal AM. The terminal is not isolated from the reference potential of the control circuit and must not be earthed.
	4	Input for current setting value signal	The current setting value signal 4–20 mA DC (0–5(10) V) is applied to this terminal. The input resistance is 233 Ω ±5 Ω.
Signal outputs	A, B, C	Relay output (alarm output)	The alarm is output via relay contacts; programmable. The maximum contact load is 230 V AC/0.3 A or 30 V DC/0.3 A.
	RUN	Signal output for motor operation	The output is switched low, if the inverter output frequency is equal to or higher than the starting frequency. The output is switched high, if no frequency is output or the DC brake is in operation (programmable).
	FU	Signal output for monitoring output frequency	The output is switched low once the output frequency exceeds a value preset in parameter 42 (or 43). Otherwise the FU output is switched high (programmable).
	SE	Reference potential for signal outputs	Reference potential for the signals RUN and FU. This terminal is isolated from the reference potential of the control circuit PC/SD.
	AM	Analog voltage output	One of 18 monitoring functions can be selected, e.g. external frequency output. The functions are determined by parameters. A DC voltmeter can be connected. The max. output voltage is 10 V.
Interface	—	PU connector (RS485)	Communications via RS485 I/O standard: RS485, Multi-Drop operation, max. 38,400 Baud
	—	USB connector	The FR Configurator can be operated by connecting the inverter to the personal computer through USB. Interface: conforms to USB 1.1; Transmission speed: 12 MBaud; Connector: USB mini B connector (receptacle mini B type)
Safety connection	S1, S2	Safety inputs	Remove the shortening wire and connect the safety relay module when using the safety stop function.

Assignment of Main Circuit Terminals

Function	Terminal	Designation	Description
Main circuit connection	L1, N	Power supply 1-phase	Connect to the commercial power supply. Keep these terminals open when using the Harmonic Converter (FR-HC) or power regeneration common converter (FR-CV).
	R/L1, S/L2, T/L3	Power supply 3-phase	
	+, –	External brake unit connection	Connect the brake unit (FR-BU2), power regeneration common converter (FR-CV) or Harmonic Converter (FR-HC).
	+, PR	External brake resistor connection	Connect a brake transistor (FR-ABR) across terminals + and PR. (The brake resistor can not be connected to the FR-E720S-008SC and 015SC.)
	+, P1	DC choke connection	Remove the jumper across terminals + and P1 and connect a DC choke.
	U, V, W	Motor connection	Voltage output of the inverter (3-phase, 0 V up to power supply voltage, 0.2–400 Hz)
	⏚	PE	Protective earth connection of inverter

The FR-F700 Series

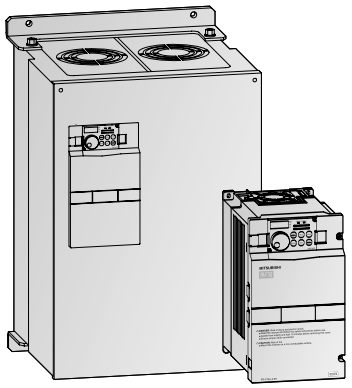

The FR-F700 is distinguished by its high energy-conservation potential. Major energy savings are achieved especially in the important lower speed ranges and during the run-up and braking phases. At an initial frequency of 35 Hz, for instance, the energy savings come to 57 % when compared with conventional concepts. The OEC (Optimum Excitation Control) technology effects an additional 10 % energy saving. It provides the ideal flux to the motor at all times.

The integrated PLC and pre-charge functions help to reduce costs and complexity in many applications because additional components are no more needed.

Output range:

0.75–630 kW, 380–500 V

Available accessories:

Optional control units, versatile options and useful accessories are available for this frequency inverter.

Please refer to page 48 for details.

Technical Details FR-F740-00023 to -01160

Product line				FR-F740-□-EC/-E1													
				00023	00038	00052	00083	00126	00170	00250	00310	00380	00470	00620	00770	00930	01160
Output	Rated motor capacity ① kW	120 % overload capacity (SLD) ⑤		0.75	1.5	2.2	3.7	5.5	7.5	11	15	18.5	22	30	37	45	55
		150 % overload capacity (LD)		0.75	1.5	2.2	3.7	5.5	7.5	11	15	18.5	22	30	37	45	55
	Rated current ⑥ A	120 % overload capacity (SLD) ⑤	I rated ⑥	2.3	3.8	5.2	8.3	12.6	17	25	31	38	47	62	77	93	116
			I max. 60	2.5	4.2	5.7	9.1	13.9	18.7	27.5	34.1	41.8	51.7	68.2	84.7	102.3	127.5
			I max. 3 s	2.8	4.6	6.2	10	15.1	20.4	30	37.2	45.6	56.4	74.4	92.4	111.6	139.2
		150 % overload capacity (LD)	I rated ⑥	2.1	3.5	4.8	7.6	11.5	16	23	29	35	43	57	70	85	106
			I max. 60	2.5	4.2	5.8	9.1	13.8	19.2	27.6	34.8	42	51.6	68.4	84	102	127.2
			I max. 3 s	3.1	5.2	7.2	11.4	17.2	24	34.5	43.5	52.5	64.5	85.5	105	127.5	159
	Rated output capacity kVA	SLD ⑤		1.8	2.9	4.0	6.3	9.6	13	19.1	23.6	29.0	35.8	47.3	58.7	70.9	88.4
		LD		1.6	2.7	3.7	5.8	8.8	12.2	17.5	22.1	26.7	32.8	43.4	53.3	64.8	80.8
	Overload capacity ②	SLD		120 % of rated motor capacity for 3 s; 110 % for 1 min. (max. ambient temperature 40 °C) – typical for pumps and fans													
		LD		150 % of rated motor capacity for 3 s; 120 % for 1 min. (max. ambient temperature 50 °C) – typical for conveyor belts and centrifuges													
	Voltage ③			3-phase AC, 0 V to power supply voltage													
	Frequency range			0.5–400 Hz													
	Control method			V/f control, optimum excitation control or simple magnetic flux vector control													
	Modulation control			Sine evaluated PWM, soft PWM													
	Carrier frequency			0.7–14.5 kHz (user adjustable)													
Input	Power supply voltage			3-phase, 380–500 V AC, -15 %/+10 %													
	Voltage range			323–550 V AC at 50/60 Hz													
	Power supply frequency			50/60 Hz ±5 %													
	Rated input capacity ④ kVA	SLD ⑤		2.8	5.0	6.1	10	13	19	22	31	37	45	57	73	88	110
		LD		2.5	4.5	5.5	9	12	17	20	28	34	41	52	66	80	100
Others	Cooling			Self cooling			Fan cooling										
	Protective structure			IP20											IP00		
	Power loss kW	SLD ⑤		0.06	0.08	0.1	0.16	0.19	0.24	0.34	0.39	0.49	0.58	0.81	1.0	1.17	1.51
		LD		0.05	0.08	0.09	0.14	0.18	0.22	0.31	0.35	0.44	0.52	0.71	0.93	1.03	1.32
	Weight		kg	3.5	3.5	3.5	3.5	3.5	6.5	6.5	7.5	7.5	13	13	23	35	35
	Dimensions (WxHxD)		mm	150x260x140					220x260x170		220x300x190		250x400x190		325x550 x195	435x550x250	

Order information ⑦	Single painted PCB	Art. no.	156569	156570	156571	156572	156573	156594	156595	156596	156597	156598	156599			
	Double painted PCB (-E1)		158589	158591	158592	158593	158594	158595	158596	158597	158598	158599	158600	158601	158602	158603
	Input power frame													169827	169828	169829
	Control card FR-CF70-EC													189878	189878	189878

Remarks:
Explanation for ① to ⑦ see next page.

Technical Details FR-F740-01800 to -12120

Product line				FR-F740-□-EC														
				01800	02160	02600	03250	03610	04320	04810	05470	06100	06830	07700	08660	09620	10940	12120
Output	Rated motor capacity ① kW	120 % overload capacity (SLD) ⑤		90	110	132	160	185	220	250	280	315	355	400	450	500	560	630
		150 % overload capacity (LD)		75	90	110	132	160	185	220	250	280	315	355	400	450	500	560
	Rated current ⑥ A	120 % overload capacity (SLD) ⑤	I rated ⑥	180	216	260	325	361	432	481	547	610	683	770	866	962	1094	1212
			I max. 60	198	238	286	357	397	475	529	602	671	751	847	953	1058	1203	1333
			I max. 3 s	216	259	312	390	433	518	577	656	732	820	924	1039	1154	1313	1454
		150 % overload capacity (LD)	I rated ⑥	144	180	216	260	325	361	432	481	547	610	683	770	866	962	1094
			I max. 60	173	216	259	312	390	433	518	577	656	732	820	924	1039	1154	1313
			I max. 3 s	216	270	324	390	487	541	648	721	820	915	1024	1155	1299	1443	1641
	Rated output capacity [kVA]	SLD ⑤		137	165	198	248	275	329	367	417	465	521	587	660	733	834	924
		LD		110	137	165	198	248	275	329	367	417	465	521	587	660	733	834
	Overload capacity ②	SLD		120 % of rated motor capacity for 3 s; 110 % for 1 min. (max. ambient temperature 40 °C) – typical for pumps and fans														
		LD		150 % of rated motor capacity for 3 s; 120 % for 1 min. (max. ambient temperature 50 °C) – typical for conveyor belts and centrifuges														
	Voltage ③			3-phase AC, 0 V to power supply voltage														
	Frequency range			0.5–400 Hz														
	Control method			V/f control, optimum excitation control or simple magnetic flux vector control														
	Modulation control			Sine evaluated PWM, soft PWM														
	Carrier frequency			0.7–6 kHz (user adjustable)														
Input	Power supply voltage			3-phase, 380–500 V AC, -15 %/+10 %														
	Voltage range			323–550 V AC at 50/60 Hz														
	Power supply frequency			50/60 Hz ±5 %														
	Rated input capacity ④ kVA	SLD ⑤		137	165	198	248	275	329	367	417	465	520	587	660	733	834	924
		LD		110	137	165	198	248	275	329	367	417	465	520	587	660	733	834
Others	Cooling			Fan cooling														
	Protective structure			IP00														
	Power loss kW	SLD ⑤		2.7	3.3	3.96	4.8	5.55	6.6	7.5	8.4	9.45	10.65	12.0	13.5	15.0	16.8	18.9
		LD		2.25	2.7	3.3	3.96	4.8	5.55	6.6	7.5	8.4	9.45	10.65	12.0	13.5	15.0	16.8
	Frequency inverter weight		kg	37	50	57	72	72	110	110	220	220	220	260	260	370	370	370
	Choke weight		kg	20	22	26	28	29	30	35	38	42	46	50	57	67	85	95
	Dimensions (WxHxD)		mm	435x550 x250	465x620x300		465x740x360		498x1010x380		680x1010x380			790x1330x440		995x1580x440		

Order information ⑦	Frequency inverters																
	Input power frame	Art. no.	169830	169831	169832	169833	169834	169835	169836	169837	169838	169839	169840	169841	169842	169843	169844
	Control card FR-CF70-ECT		189879	189879	189879	189879	189879	189879	189879	189879	189879	189879	189879	189879	189879	189879	189879

Remarks:
① The performance figures at the rated motor capacity are based on a motor voltage of 440 V AC.
② The overload capacity in % is the ratio of the overload current to the inverter's rated current in the respective operating mode. For repeated duty cycles allow sufficient time for the inverter and the motor to cool below the temperature reached at 100 % load. The waiting periods can be calculated using the r.m.s. current method (I^2xt), which requires knowledge of the duty.
③ The maximum output voltage cannot exceed the power supply voltage. The output voltage can be varied over the entire power supply voltage range.
④ The rated input capacity varies depending on the impedance values on the power supply side of the inverter (including the cables and input choke).
⑤ When the load curve with 120 % overload capacity is selected the maximum permitted ambient temperature is 40 °C.
⑥ When operating with carrier frequencies ≥2 kHz this value is reduced automatically as soon as the frequency inverter exceeds 85 % of the rated output current.
⑦ The inverter types FR-F740-01800 and above are all delivered with PCBs with two coats of protective varnish. For types FR-F740-00023 through 01160 varnished PCBs are standard.
The double-coated version is available as an option.
For overseas types refer to page 94.

Technical Details FR-F746-00023 to -01160

Product line				FR-F746-□-EC													
				00023	00038	00052	00083	00126	00170	00250	00310	00380	00470	00620	00770	00930	01160
Output	Rated motor capacity ① kW	120 % overload capacity (SLD) ⑤		0.75	1.5	2.2	3.7	5.5	7.5	11	15	18.5	22	30	37	45	55
		150 % overload capacity (LD)		0.75	1.5	2.2	3.7	5.5	7.5	11	15	18.5	22	30	37	45	55
	Rated current A	120 % overload capacity (SLD) ⑤	I rated ⑥	2.3	3.8	5.2	8.3	12.6	17	25	31	38	47	62	77	93	116
			I max. 60	2.5	4.2	5.7	9.1	13.9	18.7	27.5	34.1	41.8	51.7	68.2	84.7	102.3	127.5
			I max. 3 s	2.8	4.6	6.2	10	15.1	20.4	30	37.2	45.6	56.4	74.4	92.4	111.6	139.2
		150 % overload capacity (LD)	I rated ⑥	2.1	3.5	4.8	7.6	11.5	16	23	29	35	43	57	70	85	106
			I max. 60	2.5	4.2	5.8	9.1	13.8	19.2	27.6	34.8	42	51.6	68.4	84	102	127.2
			I max. 3 s	3.1	5.2	7.2	11.4	17.2	24	34.5	43.5	52.5	64.5	85.5	105	127.5	159
	Output capacity [kVA]	SLD ⑤		1.8	2.9	4.0	6.3	9.6	13	19.1	23.6	29.0	35.8	47.3	58.7	70.9	88.4
		LD		1.6	2.7	3.7	5.8	8.8	12.2	17.5	22.1	26.7	32.8	43.4	53.3	64.8	80.8
	Overload capacity ②	SLD		120 % of rated motor capacity for 3 s; 110 % for 1 min. (max. ambient temperature 30 °C) – typical for pumps and fans													
		LD		150 % of rated motor capacity for 3 s; 120 % for 1 min. (max. ambient temperature 40 °C) – typical for conveyor belts and centrifuges													
	Voltage ③			3-phase AC, 0 V to power supply voltage													
	Frequency range			0.5–400 Hz													
	Control method			V/f control, optimum excitation control or simple magnetic flux vector control													
	Modulation control			Sine evaluated PWM, soft PWM													
	Carrier frequency			0.7–14.5 kHz (user adjustable)													
Input	Power supply voltage			3-phase, 380–500 V AC, -15 %/+10 %													
	Voltage range			323–550 V AC at 50/60 Hz													
	Power supply frequency			50/60 Hz ±5 %													
	Rated input capacity ④ kVA	SLD ⑤		2.8	5.0	6.1	10	13	19	22	31	37	45	57	73	88	110
		LD		2.5	4.5	5.5	9	12	17	20	28	34	41	52	66	80	100
Others	Cooling			Fan cooling													
	Protective structure			IP54													
	Power loss kW	SLD ⑤		0.06	0.08	0.1	0.16	0.19	0.24	0.34	0.39	0.49	0.58	0.81	1.0	1.17	1.51
		LD		0.05	0.08	0.09	0.14	0.18	0.22	0.31	0.35	0.44	0.52	0.71	0.93	1.03	1.32
	Weight		kg	12.5	12.5	12.5	12.5	12.5	18.5	18.5	21.5	21.5	30	30	30	42	42
	Dimensions (WxHxD)		mm	249x395x210					319x395x240		319x445x260		354x560x260		360x590 x265	471x660x320	
Order information			Art. no.	163796	163797	163798	163799	163800	163801	163802	163803	163804	163805	163806	163807	163808	163809

Remarks:
① The performance figures at the rated motor capacity are based on a motor voltage of 440 V.
② The overload capacity in % is the ratio of the overload capacity to the inverter's rated current in the respective operating mode. For repeated duty cycles allow sufficient time for the inverter and the motor to cool below the temperature reached at 100 % load. The waiting periods can be calculated using the r.m.s. current method (I^2xt), which requires knowledge of the duty.
③ The maximum output voltage cannot exceed the power supply voltage. The output voltage can be varied over the entire power supply voltage range.
④ The rated input capacity varies depending on the impedance values on the power supply side of the inverter (including the cables and input choke).
⑤ When the load curve with 120 % overload capacity is selected the maximum permitted ambient temperature is 30 °C.
⑥ When operating with carrier frequencies ≥2.5 kHz this value is reduced automatically as soon as the frequency inverter exceeds 85 % of the rated output current.
* For overseas types refer to page 94.

Common Specifications FR-F700

FR-F740/FR-F746			Description
Control specifi-cations	Frequency setting resolution	Analog input	0.015 Hz/0–50 Hz (terminal 2, 4: 0–10 V/12 bit) 0.03 Hz/0–50 Hz (terminal 2, 4: 0–5 V/11 bit, 0–20 mA/11 bit, terminal 1: -10–+10 V/12 bit) 0.06 Hz/0–50 Hz (terminal 1: 0–±5 V/11 bit)
		Digital input	0.01 Hz
	Frequency accuracy		±0.2 % of the maximum output frequency (temperature range 25° ±10 °C) via analog input; ±0.01 % of the set output frequency (via digital input)
	Voltage/frequency characteristics		Base frequency adjustable from 0 to 400 Hz; selection between constant torque, variable torque or optional flexible 5-point V/f characteristics
	Starting torque		120 % (3 Hz) when set to simple magnetic flux vector control and slip compensation
	Acceleration/deceleration time		0; 0.1 to 3600 s (can be set individually)
	Acceleration/deceleration characteristics		Linear or S-form course, user selectable
	DC injection brake		Operating frequency (0–120 Hz), operating time (0–10 s) and operating voltage (0–30 %) can be set individually. The DC brake can also be activated via the digital input.
	Stall prevention		Response threshold 0–150 %, user adjustable, also via analog input
	Motor protection		Electronic motor protection relay (rated current user adjustable)
Control signals for operation	Frequency setting values	Analog input	Terminal 2, 4: 0–5 V DC, 0–10 V DC, 0/4–20 mA Terminal 1: 0–± 5 V DC, 0–± 10 V DC
		Digital input	Parameter unit or optional expansion board
	Start signal		Available individually for forward rotation and reverse rotation. Start signal automatic self-holding input (3-wire input) can be selected.
	Input signals		Any 12 signals can be selected using parameters 178 to Pr.189 (input terminal function selection): multi speed selection, second function selection, terminal 4 input selection, JOG operation selection, selection of automatic restart after instantaneous power failure, external thermal relay input, HC, CV connection (inverter run enable signal), HC connection (instantaneous power failure detection), PU operation/external interlock signal, external DC injection brake operation start, PID control enable terminal, PU operation, external operation switchover, output stop, start self-holding selection, traverse function selection, forward rotation command, reverse rotation command, inverter reset, PTC thermistor input, PID forward reverse operation switchover, PU-NET operation switchover, external-NET operation switchover, command source switchover, DC feeding operation permission, DC feeding cancel, PID integral value reset, pre-charge end command, second pre-charge end command, fault clear signal, sequence start
	Output signals	Operating status	Any of 7 signals can be selected using Pr.190 to Pr.196 (output terminal function selection): inverter running, up-to-speed, instantaneous power failure /undervoltage, overload warning, output frequency detection, second output frequency detection, regenerative brake prealarm (01800 and above), electronic thermal relay function pre-alarm, PU operation mode, inverter operation ready, output current detection, zero current detection, PID lower limit, PID upper limit, PID forward rotation reverse rotation output, bypass operation-inverter switchover MC1 to MC3, commercial power supply side motor 1 to 4 connection, inverter side motor 1 to 4 connection, fan fault output, heatsink over-heat pre-alarm, inverter running start command on, deceleration at an instantaneous power failure, PID control activated, PID deviation limit, during retry, during power failure, during PID output interruption, during pre-charge operation, during second pre-charge operation, pre-charge time over, second pre-charge time over, pre-charge level over, second pre-charge level over, pulse train output of output power, BACnet binary output, DC current feeding, life alarm, fault output 3 (power-off signal), power savings average value update timing, current average monitor, fault output 2, maintenance timer alarm, remote output, alarm output, fault output.
		When using the FR-A7AY, FR-A7AR option	In addition to the above operating modes parameters 313–319 (function selection for the additional 7 output terminals) can also be used to assign the following four signals: control circuit capacitor life, main circuit capacitor life, cooling fan life, inrush current limit circuit life (only positive logic can be set for extension terminals of the FR-A7AR)
		Analog output	You can also use parameter 54 (assign analog current output) and 158 (assign analog voltage output) to assign the following displays to one or both outputs: output frequency, motor current (steady or peak), output voltage, frequency setting value, motor running speed, converter output voltage (steady or peak), electronic thermal relay function load factor, input voltage, output voltage, load meter, reference voltage output, motor load factor, energy saving effect, regenerative brake circuit duty (01800 and above), PID set point, PID process value, PTC thermistor resistance
Display	Parameter unit display (FR-PU07/ FR-DU07)	Operating status	Output frequency, motor current (steady or peak value), output voltage, alarm indication, frequency setting, motor running speed, converter output voltage (steady or peak value), electronic thermal load factor, input power, output power, road meter, cumulative energization time, actual operation time, motor load factor, watt-hours meter, power saving effect, cumulative saving power, regenerative brake circuit duty (01800 and above), PID set point, PID process value, PID deviation monitor, I/O terminal monitor, optional input terminal monitor (FR-DU07 only), optional output terminal monitor (FR-DU07 only), option fitting state monitor (FR-PU07 only), terminal assignment state (FR-PU07 only)
		Alarm definition	Alarm definition is displayed when the protective function is activated, the output voltage/current/frequency/cumulative energization time right before the protection function was activated and the past 8 alarm definitions are stored.
		Interactive guidance	Operation guide/trouble shooting with a help function (FR-PU07 only)
Protection	Protective functions		Overcurrent cutoff (during acceleration, deceleration or at constant speed), overvoltage cutoff (during acceleration, deceleration or at constant speed), inverter protection thermal operation, motor protection thermal operation, heatsink overheat, instantaneous power failure occurence, under voltage, input phase failure, motor overload, output short circuit, ground fault overcurrent, output phase failure, external thermal relay operation, PTC thermistor operation, option alarm, parameter error, PU disconnection, retry count excess, CPU alarm, power supply short for 24 V DC power output short circuit, output current detection value excess, inrush current limit circuit fault, communication fault (inverter), analog input fault, PID signal fault, internal circuit fault (15 V power supply), brake transistor alarm detection (01800 or above), pre-charge fault, 4 mA input fault, fan alarm, overcurrent stall prevention, overvoltage stall prevention, regenerative brake prealarm, electronic thermal relay function prealarm, PU stop, maintenance timer alarm (only FR-DU07), parameter write error, copy operation error, operation panel lock, parameter copy, password locked

Block Diagram FR-F700

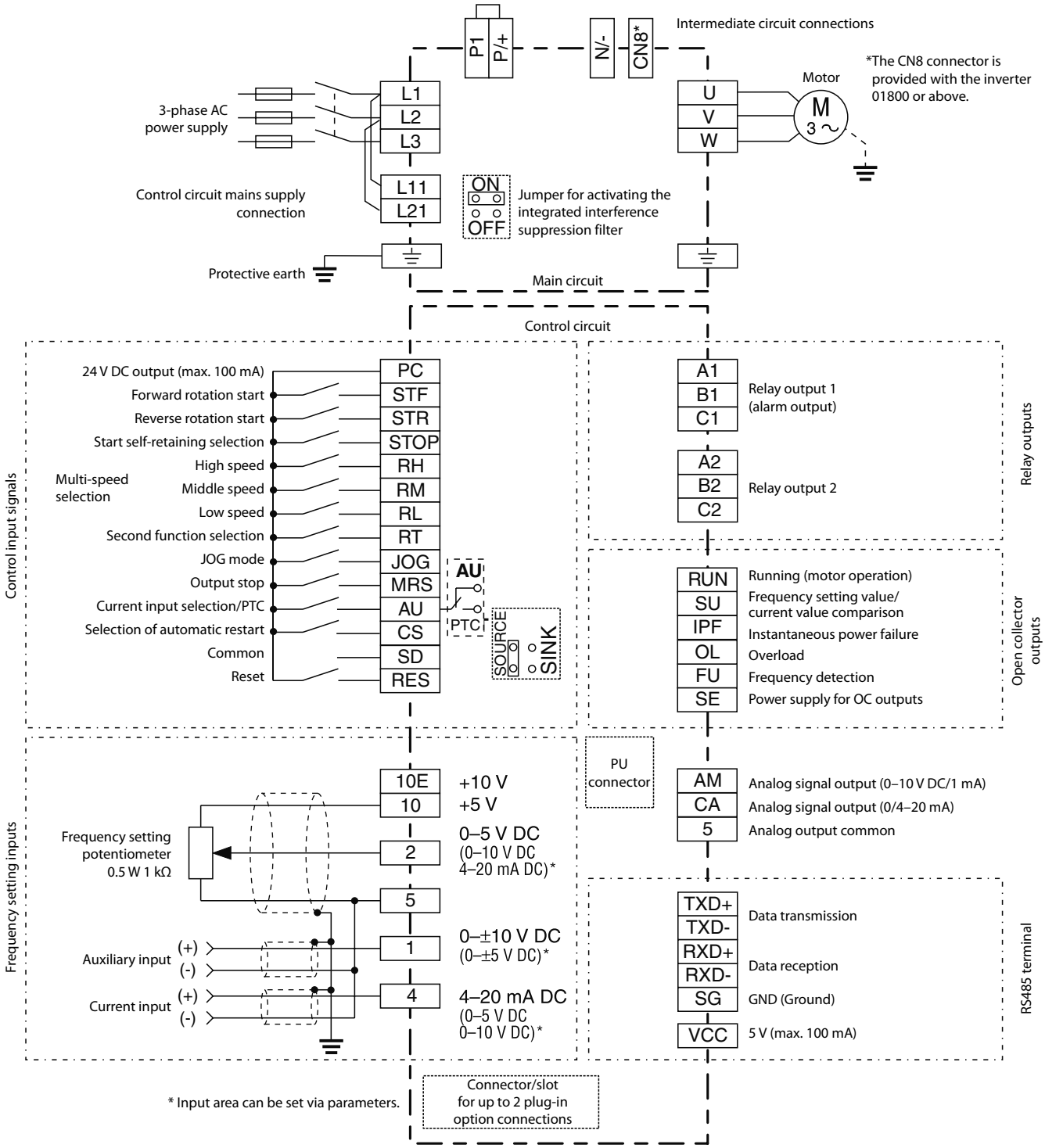

Assignment of Main Circuit Terminals

Function	Terminal	Designation	Description
Main circuit connection	L1, L2, L3	Mains supply connection	Mains power supply of the inverters (380–500 V AC, 50/60 Hz)
	P/+, N/–	External brake unit connection	An optional external brake resistor can be connected to the terminals P and N or you can connect a optional high power factor converter.
	P1, P/+	DC choke connection	An optional DC choke can be connected to the terminals P1 and P/+. The jumper on terminals P1 and P/+ must be removed when this optional choke coil is used on frequency inverter models 01160 and below. The DC choke supplied with the unit must be installed on frequency inverter models 01800 and above.
	U, V, W	Motor connection	Voltage output of the inverter (3-phase, 0 V up to power supply voltage, 0.5–400 Hz)
	L11, L21	Control circuit mains supply connection	To use external power for the control circuit connect the mains power to L11/L21 (and remove jumpers L1 and L2).
	CN8	External brake transistor control	Control connection for external brake module (type 01800 and above)
	⏚	PE	Protective earth connection of inverter

Assignment of Signal Terminals

Function	Terminal	Designation	Description
Control connection (programmable)	STF	Forward rotation start	The motor rotates forward, if a signal is applied to terminal STF.
	STR	Reverse rotation start	The motor rotates reverse, if a signal is applied to terminal STR.
	STOP	Start self-retaining selection	The start signals are self-retaining, if a signal is applied to terminal STOP.
	RH, RM, RL	Multi-speed selection	Preset of 15 different output frequencies
	JOG	JOG mode selection	The JOG mode is selected, if a signal is applied to terminal JOG (factory setting). The start signals STF and STR determine the rotation direction.
	RT	Second parameter settings	A second set of parameter settings is selected, if a signal is applied to terminal RT.
	MRS	Output stop	The inverter lock stops the output frequency without regard to the delay time. You can select a make or break signal for the controller inhibit function by changing parameter 17.
	RES	RESET input	An activated protective circuit is reset, if a signal is applied to the terminal RES (t >0.1 s).
	AU	Current input selection	The 0/4–20 mA signal on terminal 4 is enabled by a signal on the AU terminal.
		PTC input	If you connect a PTC temperature sensor you must assign the PTC signal to the AU terminal and set the slide switch on the control circuit board to the PTC position.
	CS	Automatic restart after instantaneous power failure	The inverter restarts automatically after a power failure, if a signal is applied to the terminal CS.
Common	SD	Reference potential (0 V) for the PC terminal (24 V)	When "sink" control logic is selected by setting the control signal jumper a specific control function is triggered when the corresponding control terminal is connected to the SD terminal. When "source" control logic is selected and you are using external 24 V power you must connect the 0 V of the external power supply to terminal SD. The SD terminal is isolated from the digital electronics with optocouplers.
	PC	24 V DC output	Internal power supply 24 V DC/0.1 A output
Setting value specification	10 E	Voltage output for potentiometer	Output voltage 10 V DC. Max. output current 10 mA. Recommended potentiometer: 1 kΩ, 0.5 W linear
	10		Output voltage 5 V DC. Max. output current 10 mA. Recommended potentiometer: 1 kΩ, 0.5 W linear
	2	Input for frequency setting value signal	The setting value 0–10 V or 0/4–20 mA is applied to this terminal. You can switch between voltage and current setpoint values with parameter 73. The input resistance is 10 kΩ . The terminals 2 and 10 can be used as an input for PTC-thermistor (parameter 561).
	5	Frequency setting common and analog outputs	Terminal 5 provides the common reference potential (0 V) for all analog set point values and for the analog output signals CA (current) and AM (voltage). The terminal is isolated from the digital circuit's reference potential (SD). This terminal should not be grounded.
	1	Auxiliary input for frequency setting value signal 0–±5 (10) V DC	An additional voltage setting value signal of 0–±5 (10) V DC can be applied to terminal 1. The voltage range is preset to 0–±10 V DC. The input resistance is 10 kΩ.
	4	Input for setting value signal	The setting value 0/4–20 mA or 0–10 V is applied to this terminal. You can switch between voltage and current setpoint values with parameter 267. The input resistance is 250 Ω. The current setting value is enabled via terminal function AU.
Signal output (programmable)	A1, B1, C1	Potential free Relay output 1 (alarm)	The alarm is output via relay contacts. The block diagram shows the normal operation and voltage free status. If the protective function is activated, the relay picks up. The maximum contact load is 200 V AC/0.3 A or 30 V DC/0.3 A.
	A2, B2, C2	Potential free Relay output 2	Any of the available 42 output signals can be used as the output driver. The maximum contact load is 230 V AC/0.3 A or 30 V DC/0.3 A.
	RUN	Signal output for motor operation	The output is switched low, if the inverter output frequency is equal to or higher than the starting frequency. The output is switched high, if no frequency is output or the DC brake is in operation.
	SU	Signal output for frequency setting value/current value comparison	The SU output supports a monitoring of frequency setting value and frequency current value. The output is switched low, once the frequency current value (output frequency of the inverter) approaches the frequency setting value (determined by the setting value signal) within a preset range of tolerance.
	IPF	Signal output for instantaneous power failure	The output is switched low for a temporary power failure within a range of 15 ms ≤tIPF ≤100 ms or for under voltage.
	OL	Signal output for overload alarm	The OL is switched low, if the output current of the inverter exceeds the current limit preset in parameter 22 and the stall prevention is activated. If the output current of the inverter falls below the current limit preset in parameter 22, the signal at the OL output is switched high.
	FU	Signal output for monitoring output frequency	The output is switched low once the output frequency exceeds a value preset in parameter 42 (or 43). Otherwise the FU output is switched high.
	SE	Reference potential for signal outputs	The potential that is switched via open collector outputs RUN, SU, OL, IPF and FU is connected to this terminal.
	CA	Current output 0–20 mA	One of 18 monitoring functions can be selected, e.g. external frequency output. CA and AM output can be used simultaneously. The functions are determined by parameters. An amperemeter can be connected (measuring range: 0–20 mA).
	AM	Analog output 0–10 V (1 mA)	One of 18 monitoring functions can be selected, e.g. external frequency output. CA and AM output can be used simultaneously. The functions are determined by parameters. A DC voltmeter can be connected. The max. output voltage is 10 V.
Interface	—	PU connector (RS485)	Communications via RS485 I/O standard: RS485, multi-drop operation, 4,800–38,400 baud (overall length: 500 m)
	—	RS485 terminal (via RS485 terminal)	Communications via RS485 I/O standard: RS485, multi-drop operation, 300–38,400 baud (overall length: 500 m)

The FR-A770 Series

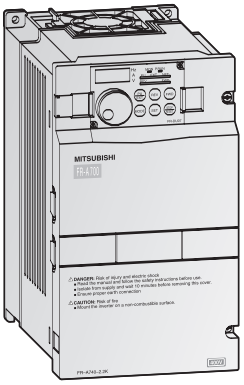

The frequency inverter FR-A770 is the first choice for operation under rough environmental conditions like waste water treatment, mining, oil industry or shipping. It was especially designed for industrial networks with 690 V power supply.

Output range:

355–630 kW, 600–690 V AC

Available accessories:

Optional control units, versatile options and useful accessories are available for this frequency inverter.

Please refer to page 48 for details.

Technical Details FR-A770-355K/560K-79

Product line				FR-A770-□-K-79	
				355/400K	560/630K
Output	Rated motor capacity ①	150 % overload capacity		355/400	560/630
	Rated current A	150 % overload capacity	I rated	401 (344) ②	611 (545) ②
			I max. 60 s	602 (516)	917 (818)
	Rated output capacity		kVA	479 (411)	730 (651)
	Overload capacity			150 % of rated motor capacity for 60 s	
	Frequency range			0.2–400 Hz	
	Modulation control			PPM control with 2 kHz carrier frequency	
Input	Power supply voltage			3-phase, 600–690 V AC, ±10 %	
	Voltage range			540–759 V AC at 50/60 Hz	
	Power supply frequency			50/60 Hz ±5 %	
	Rated input capacity		kVA	463	730
Others	Power supply voltage for control circuit ③			380–480 V AC at 50/60 Hz	
	Cooling			Fan cooling	
	Protective structure			IP00	
	Power loss		kW	8	125
	Frequency inverter weight		kg	460	485
	Choke weight		kg	80	105
	Dimensions (WxHxD)		mm	995x1580x440	
Order information			Art. no.	268859	268860

Remarks:
① Motor capacity derating is required when input voltage is below 660 V.
② When operating the vector control using a motor with encoder and a plug-in option FR-A7AP/FR-A7AL, the related output current is the value in parentheses and maximum surrounding air temperature reduces to 40 °C.
③ The voltage for separate power supply of the control circuit is 380 to 480 V AC, 50/60 Hz. It is not allowed, to use the 690 V power supply voltage. In factory setting, the control circuit is supplied with the correct voltage by an internal transformer via the jumpers across R1/L11 and S1/L21.
The following functions are not available: power failure-time deceleration-to-stop function, DC feeding, regenerative function, soft PWM operation selection.

FR-A741 High End Inverters with Integrated Power Regeneration Function

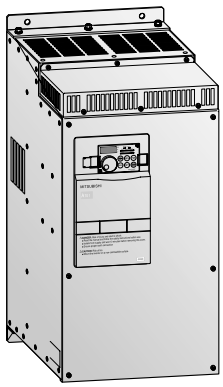

The FR-A741 sets new standards with an integrated power regeneration function that also improves braking performance.

Featuring a large number of innovative technologies, this compact frequency inverter delivers exceptional performance and is ideal for hoist drives and high-powered machines with torque that can be used for regenerative braking.

When compared to a frequency inverter with standard braking technology the required space can be reduced by up to 40 %, depending on the power range. An AC choke is integrated into the the FR-A741 and due to the 100 % regeneration capability of the FR-A741 no braking resistor or external brake transistor is required.

The output frequency ranges from 0.2 to 400 Hz.

Output range:

5.5–55 kW, 380–480 V AC

Available accessories:

Optional control units, versatile options and useful accessories are available for this frequency inverter.

Please refer to page 48 for details.

Technical Details FR-A741-5.5K–55K

Product line				FR-A741-□									
				5.5K	7.5K	11K	15K	18.5K	22K	30K	37K	45K	55K
Output	Rated motor capacity ①	kW	200 % overload capacity (ND)	5.5	7.5	11	15	18.5	22	30	37	45	55
	Rated current ③	A	200 % overload capacity (ND) I rated	12	17	23	31	38	44	57	71	86	110
			I max. 60 s	18	26	35	47	57	66	86	107	129	165
			I max. 3 s	24	34	46	62	76	88	114	142	172	220
	Rated output capacity ②		kVA	9.1	13	17.5	23.6	29	32.8	43.4	54	65	84
	Overload capacity ③			150 % of rated motor capacity for 60 s; 200 % for 3 s (max. ambient temperature 50 °C)									
	Voltage ④			3-phase AC, 0 V to power supply voltage									
	Frequency range		Hz	0.2–400									
	Modulation control			Sine evaluated PWM, soft PWM									
	Regenerative braking torque			100 % continuous/150 % for 60 s									
Input	Power supply voltage			3-phase, 380–480 V AC, -15 %/+10 %									
	Voltage range			323–528 V AC at 50/60 Hz									
	Power supply frequency			50/60 Hz ±5 %									
	Rated input capacity ⑤		kVA	12	17	20	28	34	41	52	66	80	100
Others	Cooling			Fan cooling									
	Protective structure			IP00									
	Power loss		kW	0.33	0.44	0.66	0.86	1.1	1.29	1.45	1.95	2.36	2.7
	Frequency inverter weight		kg	25	26	37	40	48	49	65	80	83	115
	Dimensions (WxHxD)		mm	250x470 x270	250x470 x 270	300x600 x294	300x600 x 294	360x600 x320	360x600 x320	450x700 x340	470x700 x368	470x700 x368	600x900 x405
Order information			Art. no.	216905	216906	216907	216908	216909	217397	216910	216911	216912	216913

Remarks:
① The rated motor capacity indicated is the maximum capacity applicable for use of the Mitsubishi Electric 4-pole standard motor.
② The rated output capacity indicated assumes that the output voltage is 440 V.
③ The % value of the overload capacity indicates the ratio of the overload current to the inverter's rated output current.
For repeated duty, allow time for the inverter and motor to return to or below the temperatures under 100 % load.
④ The maximum output voltage does not exceed the power supply voltage. The maximum output voltage can be changed within the setting range.
However, the pulse voltage value of the inverter output side voltage remains unchanged at about √2 that of the power supply.
⑤ The power supply capacity varies with the value of the power supply side inverter impedance (including those of the input choke and cables).
For overseas types refer to page 95.

Common Specifications FR-A741/FR-A770

FR-A740			Description
Control specifications	Frequency setting resolution	Analog input	0.015 Hz/0–50 Hz (terminal 2, 4: 0–10 V/12 bit) 0.03 Hz/0–50 Hz (terminal 2, 4: 0–5 V/11 bit, 0–20 mA/11 bit, terminal 1: -10–+10 V/12 bit) 0.06 Hz/0–50 Hz (terminal 1: 0–±5 V/11 bit)
		Digital input	0.01 Hz
	Frequency accuracy		0.2 % of the maximum output frequency (temperature range 25° ±10 °C) via analog input; ±0.01 % of the set output frequency (via digital input)
	Voltage/frequency characteristics		Base frequency adjustable from 0 to 400 Hz; selection between constant torque, variable torque or optional flexible 5-point V/f characteristics
	Starting torque		200 % 0.3 Hz (0.4–3.7 kVA), 150 % 0.3 Hz (5.5 kVA or more) (under real sensorless vector control or vector control)
	Torque boost		Manual torque boost
	Acceleration/deceleration time		0; 0.1–3600 s (can be set individually), linear or S-pattern acceleration/deceleration mode, backlash measures acceleration/deceleration can be selected.
	Acceleration/deceleration characteristics		Linear or S-form course, user selectable
	DC injection brake		Operating frequency (0–120 Hz), operating time (0–10 s) and operating voltage (0–30 %) can be set individually. The DC brake can also be activated via the digital input.
	Stall prevention operation level		Operation current level can be set (0–220 % adjustable), whether to use the function or not can be selected
	Motor protection		Electronic motor protection relay (rated current user adjustable)
	Torque limit level		Torque limit value can be set (0–400 % variable)
Control signals for operation	Frequency setting values	Analog input	Terminal 2, 4: 0–5 V DC, 0–10 V DC, 0/4–20 mA Terminal 1: 0–±5 V DC, 0–±10 V DC
		Digital input	Input using the setting dial of the parameter unit Four-digit BCD or 16 bit binary (when used with option FR-A7AX)
	Start signal		Available individually for forward rotation and reverse rotation. Start signal automatic self-holding input (3-wire input) can be selected.
	Input signals	Common	Any of 12 signals can be selected using parameters 178 to 189 (input terminal function selection) from among: multi speed selection, remote setting, stop-on-contact, second function selection, third function selection, terminal 4 input selection, JOG operation selection, selection of automatic restart after instantaneous power failure, flying start, external thermal relay input, inverter operation enable signal, PU operation/external inter lock signal, external DC injection brake operation start, PID control enable terminal, brake opening completion signal, PU operation/external operation switchover, load pattern selection forward rotation reverse rotation boost, V/f switching, load torque high-speed frequency, S-pattern acceleration/deceleration C switchover, pre-excitation, output stop, start self-holding selection, control mode changing, torque limit selection, start-time tuning start external input, torque bias selection 1, 2 ①, P/PI control switchover, traverse function selection, forward rotation command, reverse rotation command, inverter reset, PTC thermistor input, PID forward reverse operation switchover, PU-NET operation switchover, NET-external operation switchover, command source switchover, conditional position pulse train sign ①, conditional position droop pulse clear ①, magnetic flux decay output shutoff ⑤
		Pulse train input	100 kpps
	Output signals	Operating status	Any of 7 signals can be selected using parameter 190 to 196 (output terminal function selection) from among: inverter running, up-to-frequency, instantaneous power failure/undervoltage, overload warning, output frequency (speed) detection, second output frequency (speed) detection, third output frequency (speed) detection, electronic thermal relay function pre-alarm, PU operation mode, inverter operation ready, output current detection, zero current detection, PID lower limit, PID upper limit, PID forward rotation reverse rotation output, commercial power supply-inverter switchover MC1, commercial power supply-inverter switchover MC2, commercial power supply-inverter switchover MC3, orientation completion ①, orientation error ①⑤, brake opening request, fan fault output, heatsink overheat pre-alarm, deceleration at an instantaneous power failure, PID control activated, during retry, PID output interruption, position control preparation ready ⑤, life alarm, alarm output 1, 2, 3 (power-off signal), power savings average value update timing, current average monitor, maintenance timer alarm, remote output, forward rotation output ①, reverse rotation output ①, low speed output, torque detection, regenerative status output ①, start-time tuning completion, in-position completion ①, minor failure output and alarm output. Open collector output (5 points), relay output (2 points) and alarm code of the inverter can be output (4 bit) from the open collector
		When using the FR-A7AY, FR-A7AR option	In addition to the above operating modes parameters 313 to 319 (function selection for the additional 7 output terminals) can also be used to assign the following four signals: control circuit capacitor life, main circuit capacitor life, cooling fan life, inrush current limit circuit life (only positive logic can be set for extension terminals of the FR-A7AR)
		Analog output	You can select any signals using Pr. 54 FM terminal function selection (pulse train output) and Pr. 158 AM terminal function selection (analog output) from among output frequency, motor current (steady or peak value), output voltage, frequency setting, operation speed, motor torque, converter output voltage (steady or peak value), electronic thermal relay function load factor, input power, output power, load meter, motor excitation current, reference voltage output, motor load factor, PID set point, PID measured value, motor output, torque command, torque current command, and torque monitor.
Display	Parameter unit display (FR-PU07/ FR-DU07)	Operating status	Output frequency, motor current (steady or peak value), output voltage, frequency setting, running speed,motor torque, overload, converter output voltage (steady or peak value), electronic thermal relay function load factor, input power, output power, load meter, motor excitation current, cumlative energization time, actual operation time, motor load factor, cumulative power, energy saving effect, cumulative saving power, PID set point, PID measured value, PID deviation, inverter I/O terminal monitor, input terminal option monitor ②, output terminal option monitor ②, option fitting status ③, terminal assignment status ③, torque command, torque current command, feed back pulse ①, motor output
		Alarm definition	Alarm definition is displayed when the protective function is activated, the output voltage/current/frequency/cumulative energization time right before the protection function was activated and the past 8 alarm definitions are stored.
		Interactive guidance	Operation guide/trouble shooting with a help function ③
Protection	Protective functions		Overcurrent during acceleration, overcurrent during constant speed, overcurrent during deceleration, overvoltage during acceleration, overvoltage during constant speed, overvoltage during deceleration, inverter protection thermal operation, motor protection thermal operation, heatsink overheat, instantaneous power failure occurrence, undervoltage, input phase failure, motor overload, output side earth (ground) fault overcurrent, output short circuit, main circuit element overheat, output phase failure, external thermal relay operation ④, PTC thermistor operation ④, option alarm, parameter error, PU disconnection, retry count excess ④, CPU alarm, parameter unit power supply short circuit, 24 V DC power output short circuit, output current detection value excess ④, inrush current limit circuit alarm, communication alarm (inverter), opposite rotation deceleration error ④, analog input error, fan fault, overcurrent stall prevention, overvoltage stall prevention, electronic thermal relay function prealarm, PU stop, maintenance timer alarm ②④, parameter write error, copy operation error, parameter unit lock, parameter copy alarm, speed limit indication, encoder no-signal ①④, speed deviation large ①④, overspeed ①④, position error large ①④, encoder phase error ①④, regeneration converter overcurrent ⑤ , regeneration converter circuit fault ⑤, regeneration converter transistor protection thermal ⑤, brake sequence error ④⑤

Remarks:
① Only when the option (FR-A7AP) is mounted
② Can be displayed only on the parameter unit (FR-DU07).
③ Can be displayed only on the parameter unit (FR-PU07).
④ This protective function does not function in the initial status.
⑤ FR-A741 only

Block Diagram FR-A741

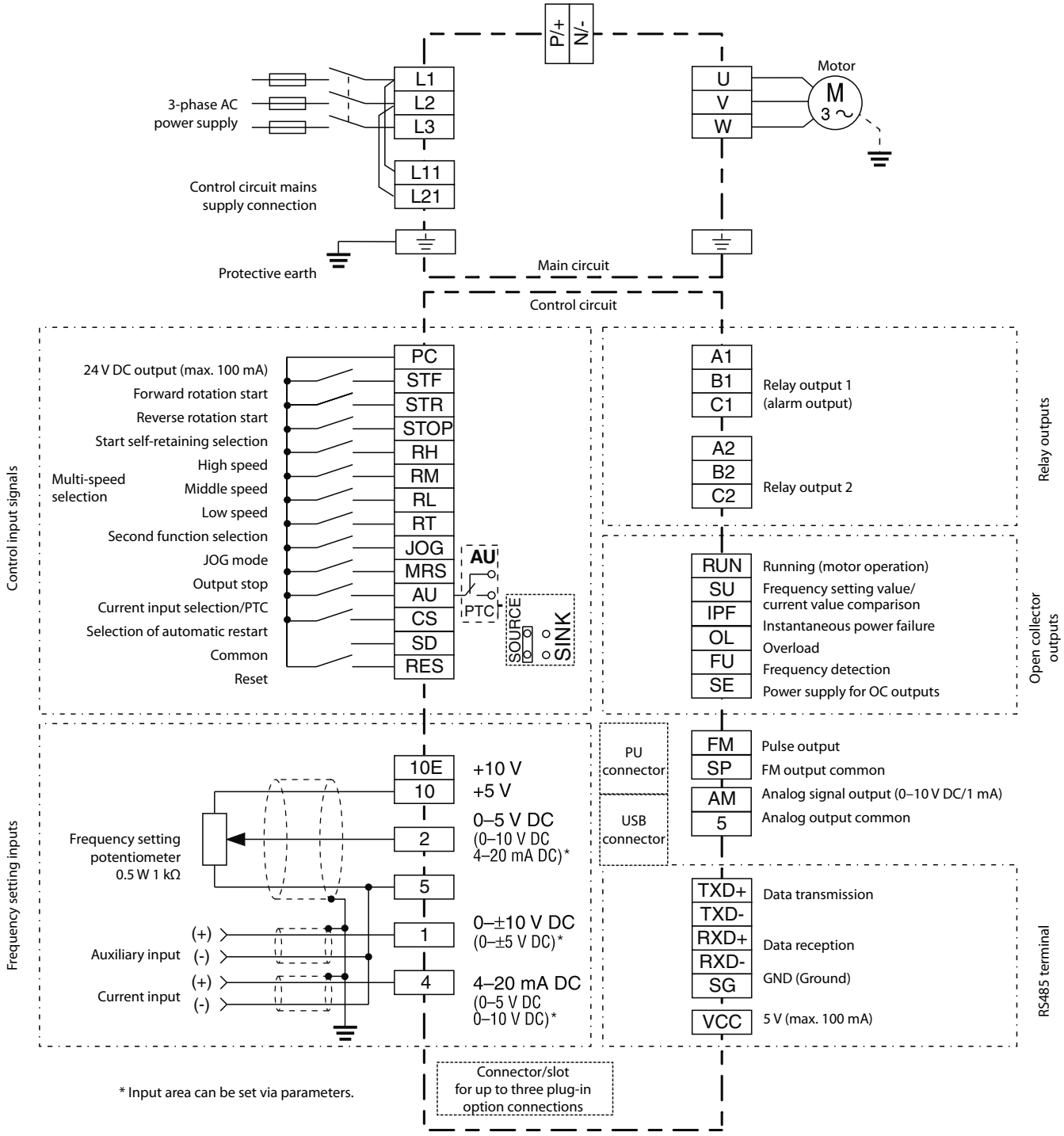

Assignment of Main Circuit Terminals

Function	Terminal	Designation	Description
Main circuit connection	L1, L2, L3	Mains supply connection	Mains power supply of the inverters (380–480 V AC, 50/60 Hz)
	P/+, N/-	Brake unit connection	Connect the brake unit (FR-BU, BU), power regeneration common converter (FR-CV), Harmonic Converter (FR-HC and MT-HC) or power regeneration converter (MTRC).
	U, V, W	Motor connection	Voltage output of the inverter (3-phase, 0 V up to power supply voltage, 0.2–400 Hz)
	L11, L21	Power supply for control circuit	To use external power for the control circuit connect the mains power to L11/L21 (and remove jumpers L1 and L2).
	⏚	PE	Protective earth connection of inverter

Block Diagram FR-A770

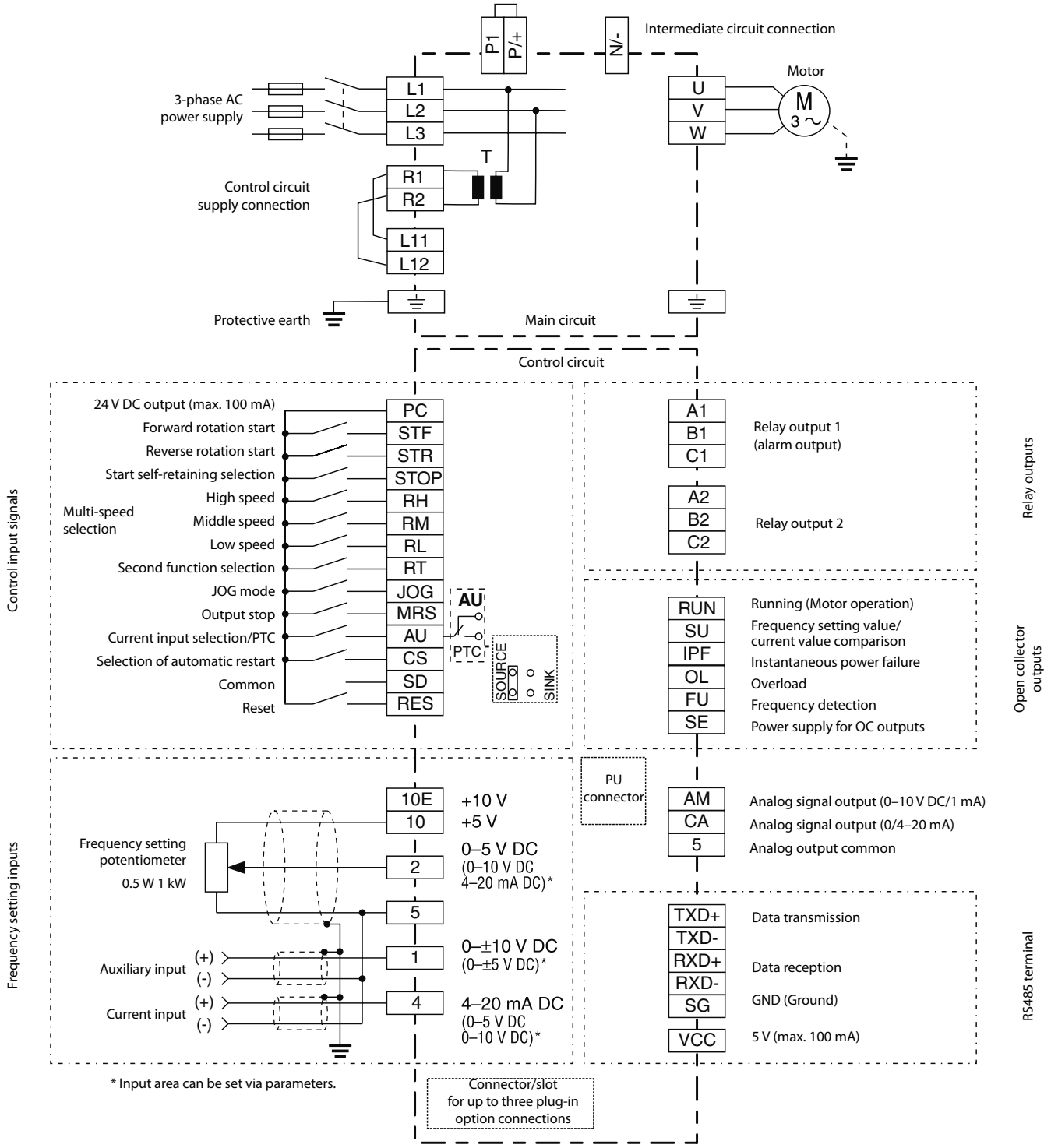

Assignment of Main Circuit Terminals

Function	Terminal	Designation	Description
Main circuit connection	L1, L2, L3	Mains supply connection	Mains power supply of the inverters (600–690 V AC, 50/60 Hz)
	P/+, N/–	—	No connection
	P/+, P1	DC choke connection	An optional DC choke can be connected to the terminals P1 and P/+. The jumper on terminals P1 and P/+ must be removed when this optional choke coil is used on frequency inverter models 01160 and below. The DC choke supplied with the unit must be installed on frequency inverter models 01800 and above.
	U, V, W	Motor connection	Voltage output of the inverter (3-phase, 0 V up to power supply voltage, 0.2–400 Hz)
	L11, L21	Power supply for control circuit	The voltage for separate power supply of the control circuit is 380 to 480 V AC, 50/60 Hz. It is not allowed, to use the 690 V power supply voltage. In factory setting, the control circuit is supplied with the correct voltage by an internal transformer via the jumpers across R1/L11 and S1/L21.
	R1, R2	Transformer output	Power supply output for control circuit (380–480 V AC, 50/60 Hz)
	⏚	PE	Protective earth connection of inverter

Assignment of Signal Terminals

Function	Terminal	Designation	Description
Control connection (programmable)	STF	Forward rotation start	The motor rotates forward, if a signal is applied to terminal STF.
	STR	Reverse rotation start	The motor rotates reverse, if a signal is applied to terminal STR.
	STOP	Start self-retaining selection	The start signals are self-retaining, if a signal is applied to terminal STOP.
	RH, RM, RL	Multi-speed selection	Preset of 15 different output frequencies according to the combination of the RH, RM and RL signals.
	JOG	JOG mode selection	The JOG mode is selected, if a signal is applied to this terminal (factory setting). The start signals STF and STR determine the rotation direction.
		Pulse train input	The JOG terminal can be used as pulse train input terminal (parameter 291 setting needs to be changed)
	RT	Second parameter settings	A second set of parameter settings is selected, if a signal is applied to terminal RT.
	MRS	Output stop	The inverter lock stops the output frequency without regard to the delay time.
	RES	RESET input	An activated protective circuit is reset, if a signal is applied to the terminal RES (t >0.1 s).
	AU	Current input selection	The 0/4–20 mA signal on terminal 4 is enabled by a signal on the AU terminal.
		PTC input	If you connect a PTC temperature sensor you must assign the PTC signal to the AU terminal and set the slide switch on the control circuit board to the PTC position.
	CS	Automatic restart after instanta-neous power failure	The inverter restarts automatically after a power failure, if a signal is applied to the terminal CS.
Common	SD	Reference potential (0 V) for the PC terminal (24 V)	When "sink" control logic is selected by setting the control signal jumper a specific control function is triggered when the corresponding control terminal is connected to the SD terminal. When "source" control logic is selected and you are using external 24 V power you must connect the 0 V of the external power supply to terminal SD. The SD terminal is isolated from the terminals 5 and SE with optocouplers.
	PC	24 V DC output	Internal power supply 24 V DC/0.1 A output
Setting value specification	10 E	Voltage output for potentiometer	Output voltage 10 V DC. Max. output current 10 mA. Recommended potentiometer: 1 kΩ, 2 W linear
	10		Output voltage 5 V DC. Max. output current 10 mA. Recommended potentiometer: 1 kΩ, 2 W linear
	2	Input for frequency setting value signal	The setting value 0–5 V DC (or 0–10 V, 0/4–20 mA) is applied to this terminal. You can switch between voltage and current setpoint values with parameter 73. The input resistance is 10 kΩ.
	5	Frequency setting common and analog outputs	Terminal 5 provides the common reference potential (0 V) for all analog set point values and for the analog output signals CA (current) and AM (voltage). The terminal is isolated from the digital circuit's reference potential (SD). This terminal should not be grounded.
	1	Auxiliary input for frequency setting value signal 0–±5 (10) V DC	An additional voltage setting value signal of 0–±5 (10) V DC can be applied to terminal 1. The voltage range is preset to 0–±10 V DC. The input resistance is 10 kΩ.
	4	Input for setting value signal	The setting value 0/4–20 mA or 0–10 V is applied to this terminal. You can switch between voltage and current setpoint values with parameter 267. The input resistance is 250 Ω. The current setting value is enabled via terminal function AU.
Signal output (programmable)	A1, B1, C1	Potential free relay output 1 (alarm)	The alarm is output via relay contacts. The block diagram shows the normal operation and voltage free status. If the protective function is activated, the relay picks up.The maximum contact load is 200 V AC/0.3 A or 30 V DC/0.3 A.
	A2, B2, C2	Potential free relay output 2	Any of the available 42 output signals can be used as the output driver. The maximum contact load is 230 V AC/0.3 A or 30 V DC/0.3 A.
	RUN	Signal output for motor operation	The output is switched low, if the inverter output frequency is equal to or higher than the starting frequency. The output is switched high, if no frequency is output or the DC brake is in operation.
	SU	Signal output for frequency setting value/current value comparison	The SU output supports a monitoring of frequency setting value and frequency current value. The output is switched low, once the frequency current value (output frequency of the inverter) approaches the frequency setting value (determined by the setting value signal) within a preset range of tolerance.
	IPF	Signal output for instantaneous power failure	The output is switched low for a temporary power failure within a range of 15 ms ≤tIPF ≤100 ms or for under voltage.
	OL	Signal output for overload alarm	The OL is switched low, if the output current of the inverter exceeds the current limit preset in parameter 22 and the stall prevention is activated. If the output current of the inverter falls below the current limit preset in parameter 22, the signal at the OL output is switched high.
	FU	Signal output for monitoring output frequency	The output is switched low once the output frequency exceeds a value preset in parameter 42 (or 43). Otherwise the FU output is switched high.
	SE	Reference potential for signal outputs	The potential that is switched via open collector outputs RUN, SU, OL, IPF and FU is connected to this terminal.
	CA	Analog current output	One of 18 monitoring functions can be selected, e.g. external frequency output. CA- and AM output can be used simultaneously. The functions are determined by parameters. Output item: output frequency (initial setting), load impedance: 200 Ω–450 Ω, output signal: 0–20 mA
	AM	Analog signal output 0–10 V DC (1 mA)	Output item: output frequency (initial setting), output signal 0–10 V DC, permissible load current 1 mA (load impedance ≥10 kΩ), resolution 8 bit
Interface	—	PU connector	A parameter unit can be connected. Communications via RS485 I/O standard: RS485, multi-drop operation, 4,800–38,400 baud (overall length: 500 m)
	—	RS485 terminal (via RS485 terminal)	Communications via RS485 I/O standard: RS485, multi-drop operation, 300–38,400 baud (overall length: 500 m)
	—	USB connector	This USB interface is used to connect the inverter to a personal computer (conforms to USB1.1)

The FR-A800 Series

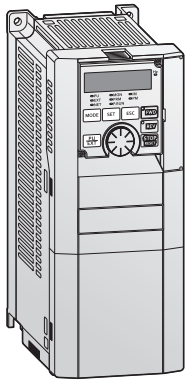

The FR-A800 series is pure high technology. This generation of Mitsubishi Electric inverters combine innovative functions and reliable technology with maximum power, economy and flexibility. Among many other features, like the possiblility to run vector control also in LD/SLD, or a 100 % ED brake transistor up to 55 kW, Online Autotuning for outstanding speed/torque accuracy, excellent smooth running performance of a synchronous motor, built-in STO emergency stop and a large number of digital/analog inputs and outputs.

Output range:

FR-A820: 0.4–132 kW, 200–240 V AC
FR-A840: 0.4–355 kW, 380–500 V AC
FR-A842: 315–630 kW, 380–500 V AC

Available accessories:

Optional control units, versatile options and useful accessories are available for this frequency inverter.

Please refer to page 48 for details.

Technical Details FR-A840-00023 to -01160

Product line				FR-A840-□-2-60													
				00023	00038	00052	00083	00126	00170	00250	00310	00380	00470	00620	00770	00930	01160
Output	Rated motor capacity ① kW	120 % overload capacity (SLD)		0.75	1.5	2.2	3.7	5.5	7.5	11	15	18.5	22	30	37	45	55
		150 % overload capacity (LD)		0.75	1.5	2.2	3.7	5.5	7.5	11	15	18.5	22	30	37	45	55
		200 % overload capacity (ND)		0.4	0.75	1.5	2.2	3.7	5.5	7.5	11	15	18.5	22	30	37	45
		250 % overload capacity (HD)		0.2	0.4	0.75	1.5	2.2	3.7	5.5	7.5	11	15	18.5	22	30	37
	Rated current A	120 % overload capacity (SLD)	I rated	2.3	3.8	5.2	8.3	12.6	17	25	31	38	47	62	77	93	116
			I max. 60 s	2.1	4.2	5.7	9.1	13.9	18.7	27.5	34.1	41.8	51.7	68.2	84.7	102.3	127.6
			I max. 3 s	2.8	4.6	6.2	10.0	15.1	20.4	30.0	37.2	45.6	56.4	74.4	92.4	111.6	139.2
		150 % overload capacity (LD)	I rated	2.1	3.5	4.8	7.6	11.5	16	23	29	35	43	57	70	85	106
			I max. 60 s	2.5	4.2	5.8	9.1	13.8	19.2	27.6	34.8	42.0	51.6	68.4	84.0	102.0	127.2
			I max. 3 s	3.2	5.3	7.2	11.4	17.3	24.0	34.5	43.5	52.5	64.5	85.5	105.0	127.5	159.0
		200 % overload capacity (ND)	I rated	1.5	2.5	4	6	9	12	17	23	31	38	44	57	71	86
			I max. 60 s	2.3	3.8	6.0	9.0	13.5	18.0	25.5	34.5	46.5	57.0	66.0	85.5	106.5	129.0
			I max. 3 s	3.0	5.0	8.0	12.0	18.0	24.0	34.0	46.0	62.0	76.0	88.0	114.0	142.0	172.0
		250 % overload capacity (HD)	I rated	0.8	1.5	2.5	4	6	9	12	17	23	31	38	44	57	71
			I max. 60 s	1.6	3.0	5.0	8.0	12.0	18.0	24.0	34.0	46.0	62.0	76.0	88.0	114.0	142.0
			I max. 3 s	2.0	3.8	6.3	10.0	15.0	22.5	30.0	42.5	57.5	77.5	95.0	110.0	142.5	177.5
	Overload capacity ②	SLD		110 % of rated motor capacity for 60 s; 120 % for 3 s (max. ambient temperature 40 °C) – inverse time characteristics													
		LD		120 % of rated motor capacity for 60 s; 150 % for 3 s (max. ambient temperature 50 °C) – inverse time characteristics													
		ND		150 % of rated motor capacity for 60 s; 200 % for 3 s (max. ambient temperature 50 °C) – inverse time characteristics													
		HD		200 % of rated motor capacity for 60 s; 250 % for 3 s (max. ambient temperature 50 °C) – inverse time characteristics													
	Voltage ③			3-phase AC, 380–500 V to power supply voltage													
	Frequency range			0.2–590 Hz													
	Control method			V/f; advanced magnetic flux vector, real sensorless vector (RSV), closed loop vector, PM sensorless vector control													
	Brake transistor 100 % ED			Built-in													
	Maximum brake torque	regenerative		100 % torque/2 % ED with built-in brake resistor							20 % torque/continuous						
		with FR-ABR option ⑦		100 % torque/10 %ED							100 % torque/6 %ED				—		
	Minimum brake resistance values ⑥		Ω	371	236	190	130	83	66	45	34	34	21	21	13.5	13.5	13.5
Input	Power supply voltage			3-phase, 380–500 V AC, -15 %/+10 %													
	Voltage range			323–550 V AC at 50/60 Hz (Undervoltage level is selectable by parameter.)													
	Power supply frequency			50/60 Hz ±5 %													
	Rated input current ⑧ A	SLD		3.2	5.4	7.8	10.9	16.4	22.5	31.7	40.3	48.2	58.4	76.8	97.6	115	141
		LD		3	4.9	7.3	10.1	15.1	22.3	31	38.2	44.9	53.9	75.1	89.7	106	130
		ND		2.3	3.7	6.2	8.3	12.3	17.4	22.5	31	40.3	48.2	56.5	75.1	91	108
		HD		1.4	2.3	3.7	6.2	8.3	12.3	17.4	22.5	31	40.3	48.2	56.5	75.1	91
	Power supply capacity ④ kVA	SLD		2.5	4.1	5.9	8.3	12	17	24	31	37	44	59	74	88	107
		LD		2.3	3.7	5.5	7.7	12	17	24	29	34	41	57	68	81	99
		ND		1.7	2.8	4.7	6.3	9.4	13	17	24	31	37	43	57	69	83
		HD		1.1	1.7	2.8	4.7	6.3	9.4	13	17	24	31	37	43	57	69
Others	Cooling			Self cooling			Fan cooling										
	Protective structure ⑤			Enclose type IP20											Open type (IP00)		
	Max. heat dissipation ⑨ kW	SLD		0.055	0.075	0.085	0.13	0.175	0.245	0.345	0.37	0.45	0.565	0.74	0.93	1.11	1.34
		LD		0.05	0.07	0.08	0.12	0.16	0.23	0.315	0.345	0.415	0.52	0.675	0.825	1.02	1.22
		ND		0.04	0.055	0.07	0.1	0.13	0.17	0.22	0.28	0.39	0.45	0.52	0.69	0.84	1.02
		HD		0.03	0.04	0.05	0.075	0.09	0.135	0.165	0.21	0.285	0.385	0.45	0.56	0.7	0.86
	Weight		kg	2,8	2,8	2,8	3,3	3,3	6,7	6,7	8,3	8,3	15	15	23	41	41
	Dimensions (WxHxD)		mm	150x260x140					220x260x170		220x300x190		250x400x190		325x550 x195	435x550x250	
Order information			Art. no.	266741	266742	266743	266744	266745	266746	266747	266748	266749	266750	266751	266752	266753	266754

Technical Details FR-A840-01800 to -06830

Product line				FR-A840-□-2-60									
				01800	02160	02600	03250	03610	04320	04810	05470	06100	06830
Output	Rated motor capacity ① kW	120 % overload capacity (SLD)		75/90	110	132	160	185	220	250	280	315	355
		150 % overload capacity (LD)		75	90	110	132	160	185	220	250	280	315
		200 % overload capacity (ND)		55	75	90	110	132	160	185	220	250	280
		250 % overload capacity (HD)		45	55	75	90	110	132	160	185	220	250
	Rated current A	120 % overload capacity (SLD)	I rated	180	216	260	325	361	432	481	547	610	683
			I max. 60	198	238	286	358	397	475	529	602	671	751
			I max. 3 s	216	259	312	390	433	518	577	656	732	820
		150 % overload capacity (LD)	I rated	144	180	216	260	325	361	432	481	547	610
			I max. 60	173	216	259	312	390	433	518	577	656	732
			I max. 3 s	216	270	324	390	488	542	648	722	821	915
		200 % overload capacity (ND)	I rated	110	144	180	216	260	325	361	432	481	547
			I max. 60	165	216	270	324	390	488	542	648	722	821
			I max. 3 s	220	288	360	432	520	650	722	864	962	1094
		250 % overload capacity (HD)	I rated	86	110	144	180	216	260	325	361	432	481
			I max. 60	172	220	288	360	432	520	650	722	864	962
			I max. 3 s	215	275	360	450	540	650	813	903	1080	1203
	Overload capacity ②	SLD		110 % of rated motor capacity for 60 s; 120 % for 3 s (max. ambient temperature 40 °C) – inverse time characteristics									
		LD		120 % of rated motor capacity for 60 s; 150 % for 3 s (max. ambient temperature 50 °C) – inverse time characteristics									
		ND		150 % of rated motor capacity for 60 s; 200 % for 3 s (max. ambient temperature 50 °C) – inverse time characteristics									
		HD		200 % of rated motor capacity for 60 s; 250 % for 3 s (max. ambient temperature 50 °C) – inverse time characteristics									
	Voltage ③			3-phase AC, 380–500 V to power supply voltage									
	Frequency range			0.2–590 Hz									
	Control method			V/f; advanced magnetic flux vector, real sensorless vector (RSV), closed loop vector, PM sensorless vector control									
	Brake transistor 100 % ED			Built-in	FR-BU2/BU-UFS (option)								
	Maximum brake torque ⑥	regenerative		20 % torque/ continuous	10 % torque/continuous								
		with FR-ABR option ⑦		—	—								
	Minimum brake resistance values ⑥		Ω	13.5	—								
Input	Power supply voltage			3-phase, 380–500 V AC, -15 %/+10 %									
	Voltage range			323–550 V AC at 50/60 Hz (Undervoltage level is selectable by parameter.)									
	Power supply frequency			50/60 Hz ±5 %									
	Rated input current ⑧ kVA	SLD		180	216	260	325	361	432	481	547	610	683
		LD		144	180	216	260	325	361	432	481	547	610
		ND		134	144	180	216	260	325	361	432	481	547
		HD		108	110	144	180	216	260	325	361	432	481
	Power supply capacity ④ kVA	SLD		137	165	198	248	275	329	367	417	465	521
		LD		110	137	165	198	248	275	329	367	417	465
		ND		102	110	137	165	198	248	275	329	367	417
		HD		83	84	110	137	165	198	248	275	329	367
Others	Cooling			Fan cooling									
	Protective structure ⑤			Open type (IP00)									
	Max. heat dissipation ⑨ kW	SLD		2.0	2.52	3.15	3.6	4.05	4.65	5.3	5.85	6.65	7.55
		LD		1.64	2.1	2.575	2.8	3.6	3.8	4.65	5.1	5.85	6.6
		ND		1.29	1.79	2.2	2.3	2.8	3.45	3.85	4.55	5.1	5.9
		HD		1.06	1.35	1.77	1.85	2.25	2.65	3.4	3.7	4.5	5.05
	Weight		kg	43	52	55	71	78	117	117	166	166	166
	Dimensions (WxHxD)		mm	435x550x250	465x620x300		465x740x360		498x1010x380		680x1010x380		
Order information			Art. no.	266755	266756	266757	266758	266759	266760	266761	266762	266763	266764

Remarks:
① The applied motor capacity indicated is the maximum capacity applicable for use of the Mitsubishi Electric 4-pole standard motor. The 200 % overload capacity (ND) is the factory default setting.
② The % value of the overload capacity indicates the ratio of the overload current to the inverter's rated output current. For repeated duty, allow time for the inverter and motor to return to or below the temperatures under 100 % load. The waiting periods can be calculated using the r.m.s. current method (I^2xt), which requires knowledge of the duty.
③ The maximum output voltage does not exceed the power supply voltage. The maximum output voltage can be changed within the setting range. However, the pulse voltage value of the inverter output side voltage remains unchanged at about √2 that of the power supply.
④ The rated input capacity varies depending on the impedance values on the power supply side of the inverter (including the cables and input choke).
⑤ FR-DU08: IP40 (except for the PU connector)
⑥ Value for the ND rating
⑦ The braking capability of the inverter can be improved with a optional brake resistor. Please do not use resistor values below the given minimum values.
⑧ The rated input current indicates a value at a rated output voltage. The impedance at the power supply side (including those of the input choke and cables) affects the rated input current.
⑨ The values displays the maximum possible heat dissipation. Please consider this values during setup of the cabinet.
For overseas types refer to page 95.

Attention: Mandatory DC choke need to be ordered seperately if 75 kW motor or bigger is connected. Please select the mandatory choke on page 59.

Technical Details FR-A842-07700 to -12120

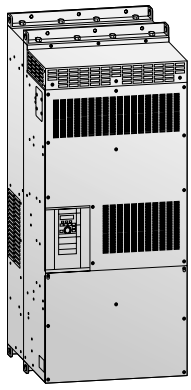

The FR-A800 inverters from 315K to 500K will be split into two units:

FR-CC2 (rectifier) and FR-A842 (inverter). This will allow easy intallation and cost effective DC bus systems.

Output range:

FR-A842: 315–630 kW, 380–500 V AC

Available accessories:

Optional control units, versatile options and useful accessories are available for this frequency inverter.

Please refer to page 48 for details.

Product line				FR-A842-□-2-60				
				07700	08660	09620	10940	12120
Output	Rated motor capacity ① kW	120 % overload capacity (SLD)		400	450	500	560	630
		150 % overload capacity (LD)		355	400	450	500	560
		200 % overload capacity (ND)		315	355	400	450	500
		250 % overload capacity (HD)		280	315	355	400	450
	Rated current A	120 % overload capacity (SLD)	I rated	770	866	962	1094	1212
			I max. 60	847	952	1058	1203	1333
			I max. 3 s	924	1039	1154	1314	1454
		150 % overload capacity (LD)	I rated	683	770	866	962	1094
			I max. 60	820	924	1039	1154	1314
			I max. 3 s	1024	1155	1299	1443	1641
		200 % overload capacity (ND)	I rated	610	683	770	866	962
			I max. 60	915	1024	1155	1299	1443
			I max. 3 s	1220	1366	1540	1732	1924
		250 % overload capacity (HD)	I rated	547	610	683	770	866
			I max. 60	1094	1220	1366	1540	1732
			I max. 3 s	1367	1525	1707	1925	2165
	Rated output capacity ② kVA	SLD		587	660	733	834	924
		LD		521	587	660	733	834
		ND		465	521	587	660	733
		HD		417	465	521	587	660
	Overload capacity ③	SLD		110 % of rated motor capacity for 60 s; 120 % for 3 s (max. ambient temperature 40 °C) – inverse time characteristics				
		LD		120 % of rated motor capacity for 60 s; 150 % for 3 s (max. ambient temperature 50 °C) – inverse time characteristics				
		ND		150 % of rated motor capacity for 60 s; 200 % for 3 s (max. ambient temperature 50 °C) – inverse time characteristics				
		HD		200 % of rated motor capacity for 60 s; 250 % for 3 s (max. ambient temperature 50 °C) – inverse time characteristics				
	Voltage ④			3-phase AC, 380–500 V to power supply voltage				
	Frequency range			0.2–590 Hz				
	Control method			V/f; advanced magnetic flux vector, real sensorless vector (RSV), closed loop vector, PM sensorless vector control				
	Maximum brake torque		regenerative	10 % torque/continuous				
Input	Power supply voltage			1-phase, 380–500 V AC, -15 %/+10 %				
	Voltage range			323–550 V AC at 50/60 Hz (Undervoltage level is selectable by parameter.)				
	Power supply frequency			50/60 Hz ±5 %				
	Rated input capacity ⑤ kVA	SLD		2.5	4.1	5.9	8.3	12
		LD		2.3	3.7	5.5	7.7	12
		ND		1.7	2.8	4.7	6.3	9.4
		HD		1.1	1.7	2.8	4.7	6.3
Others	Cooling			Fan cooling				
	Protective structure ⑥			Open type (IP00)				
	Max. heat dissipation ⑦ kW	SLD		5.8	6.69	7.37	8.6	9.81
		LD		5.05	5.8	6.48	7.34	8.63
		ND		4.45	5.1	5.65	6.5	7.4
		HD		3.9	4.41	4.93	5.65	6.49
	Weight		kg	163	163	243	243	243
	Dimensions (WxHxD)		mm	540x1330x440		680x1580x440		
Order information			Art. no.	266765	266766	266767	266768	266769

Remarks:
① The applied motor capacity indicated is the maximum capacity applicable for use of the Mitsubishi Electric 4-pole standard motor. The 200 % overload capacity (ND) is the factory default setting.
② The rated output capacity indicated assumes that the output voltage is 440 V.
③ The % value of the overload capacity indicates the ratio of the overload current to the inverter's rated output current. For repeated duty, allow time for the inverter and motor to return to or below the temperatures under 100 % load. The waiting periods can be calculated using the r.m.s. current method (I^2xt), which requires knowledge of the duty.
④ The maximum output voltage does not exceed the power supply voltage. The maximum output voltage can be changed within the setting range. However, the pulse voltage value of the inverter output side voltage remains unchanged at about √2 that of the power supply.
⑤ The rated input capacity varies depending on the impedance values on the power supply side of the inverter (including the cables and input choke).
⑥ FR-DU08: IP40 (except for the PU connector)
⑦ The values displays the maximum possible heat dissipation. Please consider this values during setup of the cabinet.
For overseas types refer to page 95.

Technical Details FR-A820-00046 to -00770

Product line				FR-A820-□-2-60								
				00046	00077	00105	00167	00250	00340	00490	00630	00770
Output	Rated motor capacity ① kW	120 % overload capacity (SLD)		0.75	1.5	2.2	3.7	5.5	7.5	11	15	18.5
		150 % overload capacity (LD)		0.75	1.5	2.2	3.7	5.5	7.5	11	15	18.0
		200 % overload capacity (ND)		0.4	0.75	1.5	2.2	3.7	5.5	7.5	11	15.0
		250 % overload capacity (HD)		0.2	0.4	0.75	1.5	2.2	3.7	5.5	7.5	11.0
	Rated current A	120 % overload capacity (SLD)	I rated	4.6	7.7	10.5	16.7	25.0	34.0	49.0	63.0	77.0
			I max. 60	5.1	8.5	11.5	18.4	27.5	37.4	53.9	69.3	84.7
			I max. 3 s	5.5	9.3	12.6	20.0	30.0	40.8	58.8	75.6	92.4
		150 % overload capacity (LD)	I rated	4.2	7.0	9.6	15.2	23.0	31.0	45.0	58.0	70.5
			I max. 60	5.0	8.4	11.5	18.2	27.6	37.2	54.0	69.6	84.6
			I max. 3 s	6.3	10.5	14.4	22.8	34.5	46.5	67.5	87.0	105.8
		200 % overload capacity (ND)	I rated	3.0	5.0	8.0	11.0	17.5	24.0	33.0	46.0	61.0
			I max. 60	4.5	7.5	12.0	16.5	26.3	36.0	49.5	69.0	91.5
			I max. 3 s	6.0	10.0	16.0	22.0	35.0	48.0	66.0	92.0	122.0
		250 % overload capacity (HD)	I rated	1.5	3.0	5.0	8.0	11.0	17.5	24.0	33.0	46.0
			I max. 60	3	6.0	10.0	16.0	22.0	35.0	48.0	66.0	92.0
			I max. 3 s	3.8	7.5	12.5	20.0	27.5	43.8	60.0	82.5	115.0
	Rated output capacity ② kVA	SLD		1.8	2.9	4.0	6.4	10.0	13.0	19.0	24.0	29.0
		LD		1.6	2.7	3.7	5.8	8.8	12.0	17.0	22.0	27.0
		ND		1.1	1.9	3.0	4.2	6.7	9.1	13.0	18.0	23.0
		HD		0.6	1.1	1.9	3.0	4.2	6.7	9.1	13.0	18.0
	Overload capacity ③	SLD		110 % of rated motor capacity for 60 s; 120 % for 3 s (max. ambient temperature 40 °C) – inverse time characteristics								
		LD		120 % of rated motor capacity for 60 s; 150 % for 3 s (max. ambient temperature 50 °C) – inverse time characteristics								
		ND		150 % of rated motor capacity for 60 s; 200 % for 3 s (max. ambient temperature 50 °C) – inverse time characteristics								
		HD		200 % of rated motor capacity for 60 s; 250 % for 3 s (max. ambient temperature 50 °C) – inverse time characteristics								
	Voltage ④			3-phase AC, 200–240 V to power supply voltage								
	Frequency range			0.2–590 Hz								
	Control method			V/f; advanced magnetic flux vector, real sensorless vector (RSV), closed loop vector, PM sensorless vector control								
	Brake transistor 100 % ED			Built-in								
	Maximum brake torque ⑤	regenerative		150 % torque/3 % ED ⑤			100 % torque/3 % ED ⑤		100 % torque/2 % ED ⑤		20 % torque/continuous	
		with FR-ABR option ⑥		100 % ED								
Input	Power supply voltage			3-phase, 200–240 V AC, -15 %/+10 %								
	Voltage range			170–264 V AC at 50/60 Hz								
	Power supply frequency			50/60 Hz ±5 %								
	Rated input capacity ⑦ kVA	SLD		2.0	3.4	5.0	7.5	12.0	17.0	24.0	31.0	37.0
		LD		1.9	3.2	4.7	7.0	11.0	16.0	22.0	29.0	35.0
		ND		1.5	2.4	4.0	5.4	8.6	13.0	17.0	23.0	30.0
		HD		0.9	1.5	2.4	4.0	5.4	8.6	13.0	17.0	23.0
Others	Cooling			Self cooling		Fan cooling						
	Protective structure ⑧			Enclose type IP20								
	Max. heat dissipation ⑨ kW	SLD		0.06	0.095	0.14	0.20	0.31	0.355	0.525	0.57	0.77
		LD		0.055	0.085	0.13	0.185	0.285	0.32	0.48	0.515	0.7
		ND		0.04	0.06	0.11	0.13	0.19	0.24	0.35	0.37	0.59
		HD		0.03	0.04	0.07	0.1	0.135	0.16	0.23	0.28	0.45
	Weight		kg	2.0	2.2	3.3	3.3	3.3	6.7	6.7	8.3	15
	Dimensions (WxHxD)		mm	110x260x110	110x260x125	150x260x140			220x260x170		220x300x190	250x400x190
Order information			Art. no.	273156	273157	273158	273159	273160	273161	273162	273163	273164

Remarks:
① The applied motor capacity indicated is the maximum capacity applicable for use of the Mitsubishi Electric 4-pole standard motor. The 200 % overload capacity (ND) is the factory default setting.
② The rated output capacity indicated assumes that the output voltage is 220 V.
③ The % value of the overload capacity indicates the ratio of the overload current to the inverter's rated output current. For repeated duty, allow time for the inverter and motor to return to or below the temperatures under 100 % load. The waiting periods can be calculated using the r.m.s. current method (I^2xt), which requires knowledge of the duty.
④ The maximum output voltage does not exceed the power supply voltage. The maximum output voltage can be changed within the setting range. However, the pulse voltage value of the inverter output side voltage remains unchanged at about √2 that of the power supply.
⑤ Value by the built-in brake resistor.
⑥ The braking capability of the inverter can be improved with a optional brake resistor. Please do not use resistor values below the given minimum values.
⑦ The rated input capacity varies depending on the impedance values on the power supply side of the inverter (including the cables and input choke).
⑧ FR-DU08: IP40 (except for the PU connector)
⑨ The values displays the maximum possible heat dissipation. Please consider this values during setup of the cabinet.
For overseas types refer to page 95.

Technical Details FR-A820-00930 to -04750

Product line				FR-A820-□-2-60							
				00930	01250	01540	01870	02330	03160	03800	04750
Output	Rated motor capacity ① kW	120 % overload capacity (SLD)		22	30	37	45	55	75	90/110	132
		150 % overload capacity (LD)		22	30	37	45	55	75	90	110
		200 % overload capacity (ND)		18.5	22	30	37	45	55	75	90
		250 % overload capacity (HD)		15	18.5	22	30	37	45	55	75
	Rated current A	120 % overload capacity (SLD)	I rated	93	125	154	187	233	316	380	475
			I max. 60	102.3	137.5	169.4	205.7	256.3	347.6	418	522.5
			I max. 3 s	111.6	150	184.8	246.8	279.6	379.2	456	570
		150 % overload capacity (LD)	I rated	85	114	140	170	212	288	346	432
			I max. 60	102	136.8	168	204	257.4	345.6	415.2	518.4
			I max. 3 s	127.5	171	210	255	318	432	519	648
		200 % overload capacity (ND)	I rated	76	90	115	145	175	215	288	346
			I max. 60	114	135	172.5	217.5	262.5	322.5	432	519
			I max. 3 s	152	180	230	290	350	430	576	692
		250 % overload capacity (HD)	I rated	61	76	90	115	145	175	215	288
			I max. 60	122	152	180	230	290	350	430	576
			I max. 3 s	152.5	190	225	287.5	362.5	437.5	537.5	720
	Rated output capacity ② kVA	SLD		35	48	59	71	89	120	145	181
		LD		32	43	53	65	81	110	132	165
		ND		29	34	44	55	67	82	110	132
		HD		23	29	34	44	55	67	82	110
	Overload capacity ③	SLD		110 % of rated motor capacity for 60 s; 120 % for 3 s (max. ambient temperature 40 °C) – inverse time characteristics							
		LD		120 % of rated motor capacity for 60 s; 150 % for 3 s (max. ambient temperature 50 °C) – inverse time characteristics							
		ND		150 % of rated motor capacity for 60 s; 200 % for 3 s (max. ambient temperature 50 °C) – inverse time characteristics							
		HD		200 % of rated motor capacity for 60 s; 250 % for 3 s (max. ambient temperature 50 °C) – inverse time characteristics							
	Voltage ④			3-phase AC, 200–240 V to power supply voltage							
	Frequency range			0.2–590 Hz							
	Control method			V/f; advanced magnetic flux vector, real sensorless vector (RSV), closed loop vector, PM sensorless vector control							
	Brake transistor 100 % ED			Built-in						—	
	Maximum brake torque ⑤	regenerative		20 % torque/continuous						10 % torque/continuous	
		with FR-ABR option ⑥		100 % ED		—					
Input	Power supply voltage			3-phase, 200–240 V AC, -15 %/+10 %							
	Voltage range			170–264 V AC at 50/60 Hz							
	Power supply frequency			50/60 Hz ±5 %							
	Rated input capacity ⑦ kVA	SLD		44	58	70	84	103	120	145	181
		LD		41	53	68	79	97	110	132	165
		ND		37	43	57	69	82	101	110	132
		HD		30	37	43	57	69	82	82	110
Others	Cooling			Fan cooling							
	Protective structure ⑧			Enclose type IP20		Open type (IP00)					
	Max. heat dissipation ⑨ kW	SLD		0.95	1.0	1.45	1.65	2.12	2.75	3.02	3.96
		LD		0.85	0.95	1.3	1.48	1.9	2.45	2.71	3.53
		ND		0.72	0.88	1.05	1.27	1.61	1.83	2.18	2.7
		HD		0.6	0.84	0.88	1.05	1.3	1.45	1.7	2.22
	Weight		kg	15.0	15.0	22.0	42.0	42.0	54.0	74.0	74.0
	Dimensions (WxHxD)		mm	250x400x190		325x550x195	435x550x250		465x700x1250	465x740x360	
Order information			Art. no.	273165	273166	273167	273168	273169	273170	273171	273172

Remarks:
① The applied motor capacity indicated is the maximum capacity applicable for use of the Mitsubishi Electric 4-pole standard motor. The 200 % overload capacity (ND) is the factory default setting.
② The rated output capacity indicated assumes that the output voltage is 220 V.
③ The % value of the overload capacity indicates the ratio of the overload current to the inverter's rated output current. For repeated duty, allow time for the inverter and motor to return to or below the temperatures under 100 % load. The waiting periods can be calculated using the r.m.s. current method (I^2xt), which requires knowledge of the duty.
④ The maximum output voltage does not exceed the power supply voltage. The maximum output voltage can be changed within the setting range. However, the pulse voltage value of the inverter output side voltage remains unchanged at about √2 that of the power supply.
⑤ Value by the built-in brake resistor.
⑥ The braking capability of the inverter can be improved with a optional brake resistor. Please do not use resistor values below the given minimum values.
⑦ The rated input capacity varies depending on the impedance values on the power supply side of the inverter (including the cables and input choke).
⑧ FR-DU08: IP40 (except for the PU connector)
⑨ The values displays the maximum possible heat dissipation. Please consider this values during setup of the cabinet.
For overseas types refer to page 95.

Attention: Mandatory DC choke need to be ordered seperately if 75 kW motor or bigger is connected. Please select the mandatory choke on page 59.

Technical Details FR-CC2

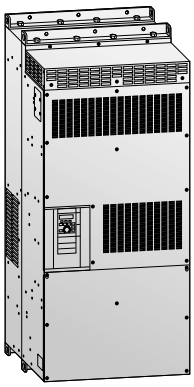

The converter module FR-CC2 is a diode converter unit. It has to be used together with the FR-A842 inverter unit. The separation of the inverter and the converter module allows flexible design of different systems such as parallel drive and common bus line to reduce cost and to minimize installation space.

Product line				315K	355K	400K	450K	500K
Output	Rated motor capacity	kW	200 % overload capacity (ND)	315	355	400	450	500
	Rated current	A	200 % overload capacity (ND) I rated	683	770	866	962	1094
			I max. 60	1024.5	1155	1299	1443	1641
			I max. 3 s	1366	1540	1732	1924	2188
	Overload capacity ①		ND	150 % of rated motor capacity for 60 s; 200 % for 3 s (max. ambient temperature 50 °C) – inverse time characteristics				
	Voltage ②			3-phase AC, 430–780 V ⑤				
	Frequency range			0.5–400 Hz				
	Modulation control			Sine evaluated PWM, soft PWM				
	Regenerative braking torque			10 % torque/continuous				
Input	Power supply voltage			3-phase, 380–500 V AC, -15 %/+10 %				
	Voltage range			323–550 V AC at 50/60 Hz				
	Power supply frequency			50/60 Hz ±5 %				
	Rated input capacity ③	kVA	ND	465	521	587	660	733
Others	Cooling			Fan cooling				
	Protective structure ④			Open type (IP00)				
	Max. heat dissipation ⑥		kW	2.35	2.6	3.05	3.4	3.8
	Weight		kg	210	213	282	285	288
	Dimensions (WxHxD)		mm	600x1330x440		600x1580x440		
Order information			Art. no.	274507	274508	274509	274510	274511

① The % value of the overload current rating indicated is the ratio of the overload current to the inverter's rated output current. For repeated duty, allow time for the converter unit and the inverter to return to or below the temperatures under 100 % load.
② The converter unit output voltage varies according to the input power supply voltage and the load. The maximum point of the voltage waveform at the converter unit output side is approximately the power supply voltage multiplied by √2.
③ The power supply capacity is the value at the rated output current. It varies by the impedance at the power supply side (including those of the input choke and cables).
④ FR-DU08: IP40 (except for the PU connector section)
⑤ The permissible voltage imbalance ratio is 3 % or less. (Imbalance ratio = (highest voltage between lines – average voltage between three lines)/average voltage between three lines x100)
⑥ The values displays the maximum possible heat dissipation. Please consider this values during setup of the cabinet.

Common Specifications FR-A800

FR-A840			Description
Control specifications	Frequency setting resolution	Analog input	0.015 Hz/0–50 Hz (terminal 2, 4: 0–10 V/12 bit) 0.03 Hz/0–50 Hz (terminal 2, 4: 0–5 V/11 bit, 0–20 mA/11 bit, terminal 1: -10–+10 V/12 bit) 0.06 Hz/0–50 Hz (terminal 1: 0–±5 V/11 bit)
		Digital input	0.01 Hz
	Frequency accuracy		0.2 % of the maximum output frequency (temperature range 25 °C ±10 °C) via analog input; ±0.01 % of the set output frequency (via digital input)
	Voltage/frequency characteristics		Base frequency adjustable from 0 to 400 Hz; selection between constant torque, variable torque or optional flexible 5-point V/f characteristics
	Starting torque		200 % 0.3 Hz (0.4–3.7 kVA), 150 % 0.3 Hz (5.5 kVA or more) (under real sensorless vector control or vector control)
	Torque boost		Manual torque boost
	Acceleration/deceleration time		0–3600 s (can be set individually), linear or S-pattern acceleration/deceleration mode, backlash measures acceleration/deceleration can be selected.
	Acceleration/deceleration characteristics		Linear or S-form course, user selectable
	DC injection brake		Operating frequency (0–120 Hz), operating time (0–10 s) and operating voltage (0–30 %) can be set individually. The DC brake can also be activated via the digital input.
	Stall prevention operation level		Operation current level can be set (0–220 % adjustable), whether to use the function or not can be selected
	Motor protection		Electronic motor protection relay (rated current user adjustable)
	Torque limit level		Torque limit value can be set (0–400 % variable)
Control signals for operation	Frequency setting values	Analog input	Terminal 2, 4: 0–5 V DC, 0–10 V DC, 0/4–20 mA Terminal 1: 0–±5 V DC, 0–±10 V DC
		Digital input	Input using the setting dial of the parameter unit Four-digit BCD or 16 bit binary (when used with option FR-A8AX)
	Start signal		Available individually for forward rotation and reverse rotation. Start signal automatic self-holding input (3-wire input) can be selected.
	Input signals	Common	Low-speed operation command, middle-speed operation command, high-speed operation command, second function selection, terminal 4 input selection, JOG operation selection, electronic bypass function ④, selection of automatic restart after instantaneous power failure ⑤, flying start ⑤, output stop, start self-holding selection, forward rotation command, reverse rotation command, inverter reset The input signal can be changed using Pr. 178 to Pr. 189 (input terminal function selection).
		Pulse train input	100 kpps
		Operating status	Maximum and minimum frequency settings, multi-speed operation, acceleration/deceleration pattern, thermal protection, DC injection brake, starting frequency, JOG operation, output stop (MRS), stall prevention, regeneration avoidance, increased magnetic excitation deceleration, DC feeding ④, frequency jump, rotation display, automatic restart after instantaneous power failure, electronic bypass sequence, remote setting, automatic acceleration/deceleration, intelligent mode, retry function, carrier frequency selection, fast-response current limit, forward/reverse rotation prevention, operation mode selection, slip compensation, droop control, load torque high-speed frequency control, speed smoothing control, traverse, auto tuning, applied motor selection, gain tuning, machine analyzer ①④, RS485 communication, PID control, PID pre-charge function, easy dancer control, cooling fan operation selection, stop selection (deceleration stop/coasting), power-failure deceleration stop function ④, stop-on-contact control, PLC function, life diagnosis, maintenance timer, current average monitor, multiple rating, orientation control ①, speed control, torque control, position control, pre-excitation, torque limit, test run, 24 V power supply input for control circuit, safety stop function, vibration control
	Output signal	Open collector output (five terminals) Relay output (two terminals)	Inverter running, up to frequency, instantaneous power failure/undervoltage ④, overload warning, output frequency detection, fault Fault codes of the inverter can be output (4 bits) from the open collector.
Indication	For meter	Current output	Max. 20 mA DC: one terminal (output current) The monitored item can be changed using Pr. 54 FM/CA terminal function selection.
		Voltage output	Max. ±10 V DC: one terminal (output voltage) The monitored item can be changed using Pr. 158 AM terminal function selection.
	Operation panel (FR-DU08)	Operating status	Output frequency, output current, output voltage, frequency setting value The monitored item can be changed using Pr. 52 Operation panel main monitor selection.
		Fault record	Fault record is displayed when a fault occurs. Past 8 fault records and the conditions immediately before the fault (output voltage/current/frequency/cumulative energization time/year/month/date/time) are saved.
Protection	Protective functions		Overcurrent trip during acceleration, overcurrent trip during constant speed, overcurrent trip during deceleration or stop, regenerative overvoltage trip during acceleration, regenerative overvoltage trip during constant speed, regenerative overvoltage trip during deceleration or stop, inverter overload trip (electronic thermal relay function), motor overload trip (electronic thermal relay function), heatsink overheat, instantaneous power failure ④, undervoltage ④, input phase loss ②④, stall prevention stop, loss of synchronism detection ②, brake transistor alarm detection ④, output side earth (ground) fault overcurrent, output phase loss, external thermal relay operation ②, PTC thermistor operation ②, option fault, communication option fault, parameter storage device fault, PU disconnection, retry count excess ②, CPU fault, operation panel power supply short circuit/RS485 terminals power supply short circuit, 24 V DC power fault, abnormal output current detection ②, inrush current limit circuit fault ④, communication fault (inverter), analog input fault, USB communication fault, safety circuit fault, overspeed occurrence ②, speed deviation excess detection ①②, signal loss detection ①②, excessive position fault ①②, brake sequence fault ②, encoder phase fault ①②, 4 mA input fault ②, pre-charge fault ②, PID signal fault ②, option fault, opposite rotation deceleration fault ②, internal circuit fault, abnormal internal temperature ③④
	Warning function		Fan alarm, stall prevention (overcurrent), stall prevention (overvoltage), regenerative brake pre-alarm ②④, electronic thermal relay function pre-alarm, PU stop, speed limit indication (output during speed limit) ②, parameter copy, safety stop, maintenance signal output ②④, maintenance timer 1 to 3 ②⑤, USB host error, home position return setting error ②, home position return uncompleted ②, home position return parameter setting error ②, operation panel lock ②, password locked ②, parameter write error, copy operation error, 24 V external power supply operation, internal-circulation fan alarm ③④

Remarks:
① Available only when the option (FR-A8AP) is mounted.
② This protective function is not available in the initial status.
③ For PM sensorless vector control..
④ Not for A842
⑤ Only for A842

Common Specifications FR-CC2

FR-CC20		Description
Input signals (three terminals)		External thermal relay input, converter reset The input signal can be changed using Pr.178, Pr.187, and Pr.189 (input terminal function selection).
Operational functions		Thermal protection, DC injection brake, automatic restart after instantaneous power failure, retry function, RS-485 communication, life diagnosis, maintenance timer, 24 V power supply input for control circuit
Output signal, Open collector output (five terminals) Relay output (one terminal)		Inverter operation enable (positive logic, negative logic), instantaneous power failure/undervoltage, inverter reset, fan fault output, fault The output signal can be changed using Pr.190 to Pr.195 (output terminal function selection).
Operation panel (FR-DU08)	Operating status	Converter output voltage, input current, electric thermal relay function load factor The monitored item can be changed using Pr.774 to Pr.776 operation panel monitor selection 1 to 3.
	Fault record	Fault record is displayed when a fault occurs. Past 8 fault records and the conditions immediately before the fault (converter output voltage/input current/electronic thermal relay function load factor/cumulative energization time/year/month/date/time) are saved.
Protective/warning function	Protective function	Overcurrent trip, overvoltage trip, converter overload trip (electronic thermal relay function), heatsink overheat, instantaneous power failure, under-voltage, input phase loss ③, external thermal relay operation, PU disconnection③, retry count excess③, parameter storage device fault, CPU fault, 24 V DC power fault, inrush current limit circuit fault, communication fault (inverter), option fault, operation panel power supply short circuit RS485 terminals power supply short circuit, Internal circuit fault
	Warning function	Fan alarm, electronic thermal relay function pre-alarm, maintenance timer 1 to 3 ③, operation panel lock ③, password locked ③, parameter write error, copy operation error, 24 V external power supply operation
Environment	Surrounding air temperature	-10 °C to +50 °C (non-freezing)
	Surrounding air humidity	With IEC60721-3-3 3C2 conforming circuit board coating: 95 % RH or less (non-condensing) With standard circuit board coating: 90 % RH or less (non-condensing)
	Storage temperature ①	-20 °C to +65 °C
	Atmosphere	Indoors (without corrosive gas, flammable gas, oil mist, dust and dirt, etc.)
	Altitude/vibration	Maximum 1000 m above sea level, 2.9 m/s² or less ② at 10 to 55 Hz (directions of X, Y, Z axes)

Remarks:
① Temperature applicable for a short time, e.g. in transit.
② For the installation in an altitude above 1000 m (up to 2500 m), derate the rated current 3 % per 500 m.
③ This protective function is not available in the initial status.

Block Diagram FR-A800

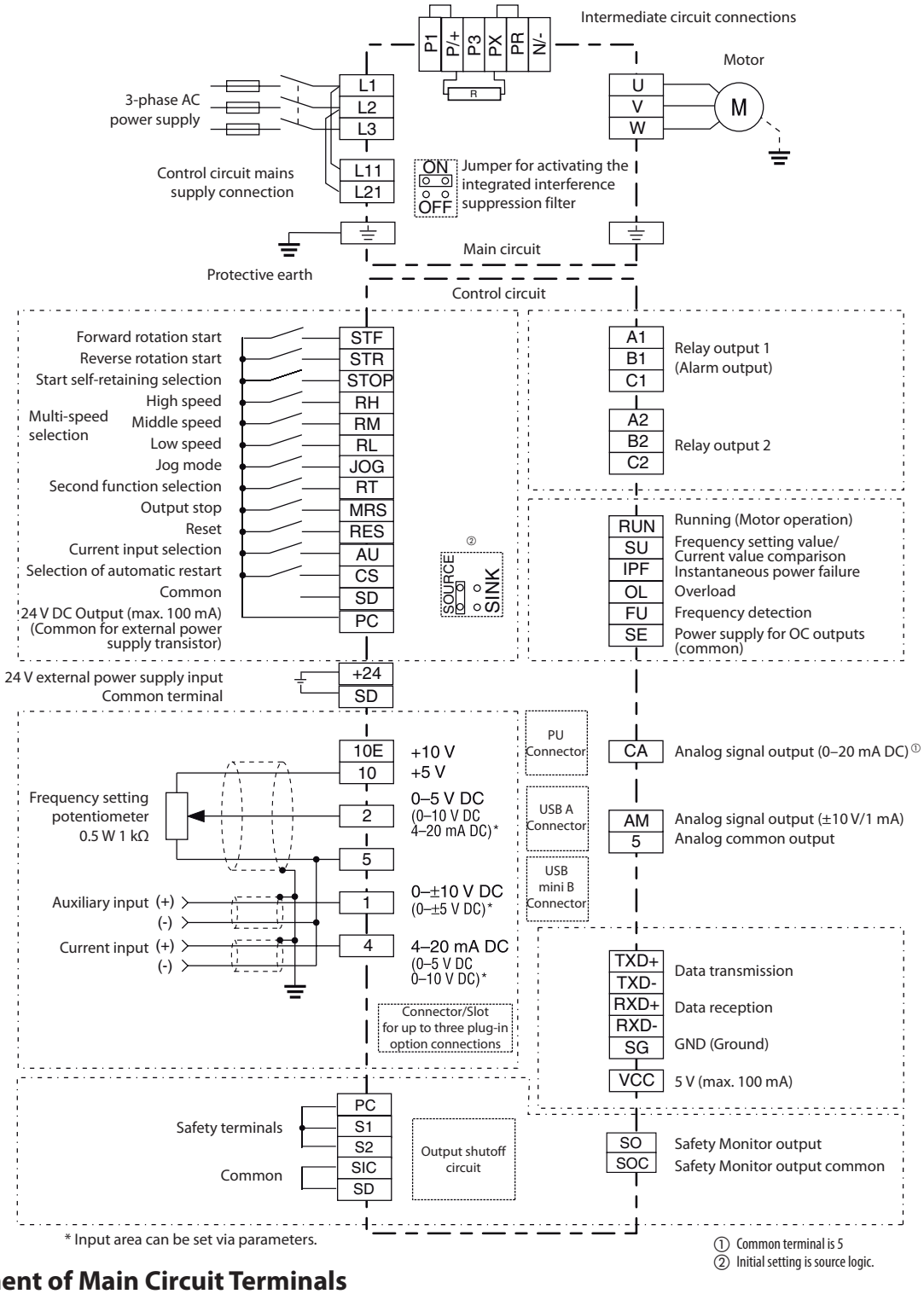

* Input area can be set via parameters.

① Common terminal is 5
② Initial setting is source logic.

Assignment of Main Circuit Terminals

Function	Terminal	Designation	Description
Main circuit connection	L1, L2, L3	Mains supply connection	Mains power supply of the inverters (FR-A820: 200–240 V AC, 50/60 Hz); (FR-A840: 380–500 V AC, 50/60 Hz)
	P/+, PR	Brake resistor connection FR-ABR	FR-A820-00046–00490/FR-A840-00023–00250
	P3, PR		FR-A820-00770–01250/FR-A840-00470–01800
	P/+, N/-	Brake unit connection	Connect the brake unit (FR-BU, BU), power regeneration common converter (FR-CV), Harmonic Converter (FR-HC and MT-HC) or power regeneration converter (MTRC).
	P/+, P1	DC choke connection	An optional DC choke can be connected to the terminals P1 and P/+. The jumper on terminals P1 and P/+ must be removed when this optional choke is used on frequency inverter models FR-A820-03160 or lower and FR-A840-01800 or lower. When using a motor with 75 kW or higher, always connect a mandatory DC choke. The DC choke must be installed on frequency inverter models FR-A820-03800 or higher and FR-A840-02160 or higher.
	PR, PX	Built-in brake circuit connection	When the jumper is connected across terminals PR and PX (initial status), the built-in brake resistor circuit is valid.
	U, V, W	Motor connection	Voltage output of the inverter (3-phase, 0 V up to power supply voltage, 0.2–590 Hz)
	L11, L21	Power supply for control circuit	To use external power for the control circuit connect the mains power to L11/L21 (and remove jumpers L1 and L2).
	⏚	PE	Protective earth connection of inverter

Block Diagram FR-A842

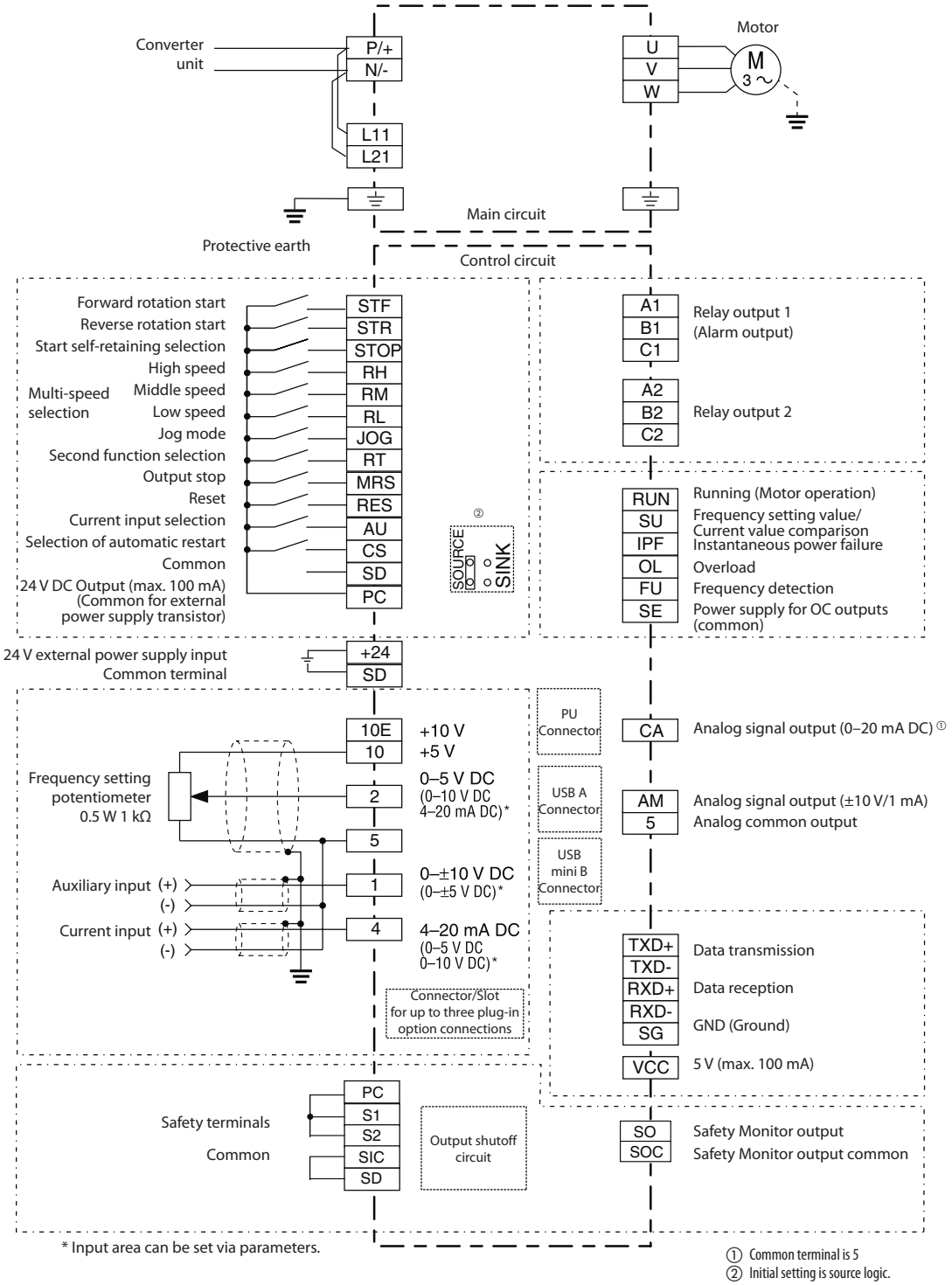

Assignment of Main Circuit Terminals

Function	Terminal	Designation	Description
Main circuit connection	P/+, N/-	Converter unit connection	Connect the converter unit FR-CC2.
	U, V, W	Motor connection	Voltage output of the inverter (3-phase, 0 V up to power supply voltage, 0.2–590 Hz)
	L11, L21	Power supply for control circuit	The voltage for separate power supply of the control circuit is 380 to 480 V AC, 50/60 Hz.
	⏚	PE	Protective earth connection of inverter

Block Diagram FR-CC2

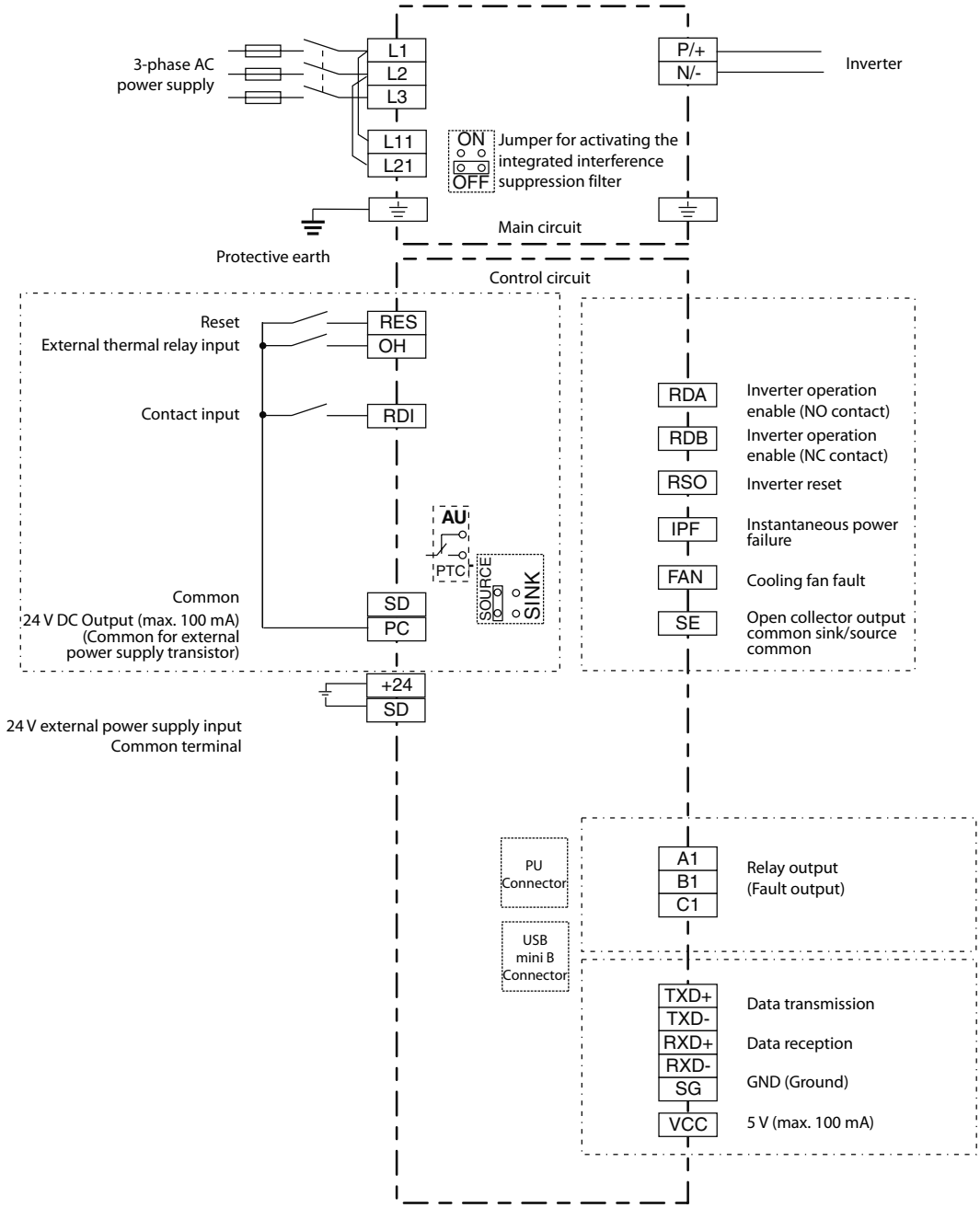

Assignment of Main Circuit Terminals

Function	Terminal	Designation	Description
Main circuit connection	L1, L2, L3	Mains supply connection	Mains power supply of the inverters (380–480 V AC, 50/60 Hz)
	L11, L21	Power supply for control circuit	To use external power for the control circuit connect the mains power to L11/L21 (and remove jumpers L1 and L2).
	P/+, N/-	Inverter connection	Connect to terminals P/+ and N/- of the inverter.
	⏚	PE	Protective earth connection of inverter

Assignment of Signal Terminals (FR-A800 and FR-CC2)

Function	Terminal	Designation	Description
Control connection (programmable)	STF	Forward rotation start	The motor rotates forward, if a signal is applied to terminal STF.
	STR	Reverse rotation start	The motor rotates reverse, if a signal is applied to terminal STR.
	STOP	Start self-retaining selection	The start signals are self-retaining, if a signal is applied to terminal STOP.
	RH, RM, RL	Multi-speed selection	Preset of 15 different output frequencies according to the combination of the RH, RM and RL signals.
	JOG	Jog mode selection	The JOG mode is selected, if a signal is applied to this terminal (factory setting). The start signals STF and STR determine the rotation direction.
		Pulse train input	The JOG terminal can be used as pulse train input terminal (parameter 291 setting needs to be changed)
	RT	Second parameter settings	A second set of parameter settings is selected, if a signal is applied to terminal RT.
	MRS	Output stop	The inverter lock stops the output frequency without regard to the delay time.
	RES	RESET input	An activated protective circuit is reset, if a signal is applied to the terminal RES (t >0.1 s).
	OH ①	External thermal relay input	The external thermal relay input (OH) signal is used when using an external thermal relay or a thermal protector built into the motor to protect the motor from overheating. When the thermal relay is activated, the inverter trips by the external thermal relay operation (E.OHT).
	RDI ①	Contact input	No function is assigned in the initial setting. The function can be assigned by setting Pr.178.
	AU	Current input selection	The 0/4–20 mA signal on terminal 4 is enabled by a signal on the AU terminal.
		PTC input	If you connect a PTC temperature sensor you must assign the PTC signal to the AU terminal and set the slide switch on the control circuit board to the PTC position.
	CS	Automatic restart after instanta-neous power failure	The inverter restarts automatically after a power failure, if a signal is applied to the terminal CS.
Common	SD	Reference potential (0 V) for the PC terminal (24 V)	Common terminal for contact input terminal (sink logic); Connect this terminal to the power supply common terminal of a transistor output (open collector output) device, such as a programmable controller, in the source logic to avoid malfunction by undesirable current. Common terminal for the 24 V DC power supply (terminal PC, terminal +24) Isolated from terminals 5 and SE.
	PC	24 V DC output	Connect this terminal to the power supply common terminal of a transistor output (open collector output) device, such as a programmable controller, in the source logic to avoid malfunction by undesirable current. Common terminal for contact input terminal (source logic). Can be used as a 24 V DC 0.1 A power supply.
	+24	24 V external power supply input	For connecting a 24 V external power supply. If a 24 V external power supply is connected, power is supplied to the control circuit while the main power circuit is OFF.
Setting value specification	10 E	Voltage output for potentiometer	Output voltage 10 V DC. Max. output current 10 mA. Recommended potentiometer: 1 kΩ, 2 W linear
	10		Output voltage 5 V DC. Max. output current 10 mA. Recommended potentiometer: 1 kΩ, 2 W linear
	2	Input for frequency setting value signal	The setting value 0–5 V DC (or 0–10 V, 0/4–20 mA) is applied to this terminal. You can switch between voltage and current setpoint values with parameter 73. The input resistance is 10 kΩ.
	5	Frequency setting common and analog outputs	Terminal 5 provides the common reference potential (0 V) for all analog set point values and for the analog output signals CA (current) and AM (voltage). The terminal is isolated from the digital circuit's reference potential (SD). This terminal should not be grounded.
	1	Auxiliary input for frequency setting value signal 0–±5 (10) V DC	An additional voltage setting value signal of 0–±5 (10) V DC can be applied to terminal 1. The voltage range is preset to 0–±10 V DC. The input resistance is 10 kΩ.
	4	Input for setting value signal	The setting value 0/4–20 mA or 0–10 V is applied to this terminal. You can switch between voltage and current setpoint values with parameter 267. The input resistance is 250 Ω. The current setting value is enabled via terminal function AU.
Signal output (programmable)	A1, B1, C1	Potential free relay output 1 (Alarm)	The alarm is output via relay contacts. The block diagram shows the normal operation and voltage free status. If the protective function is activated, the relay picks up. The maximum contact load is 200 V AC/0.3 A or 30 V DC/0.3 A.
	A2, B2, C2	Potential free relay output 2	Any of the available 42 output signals can be used as the output driver. The maximum contact load is 230 V AC/0.3 A or 30 V DC/0.3 A.
	RUN	Signal output for motor operation	The output is switched low, if the inverter output frequency is equal to or higher than the starting frequency. The output is switched high, if no frequency is output or the DC brake is in operation.
	RDA ①	Inverter operation enable (NO contact)	The contact is closed when the converter unit is ready.
	RDB ①	Inverter operation enable (NC contact)	The contact is open when the converter unit has a fault or is resetted.
	RSO ①	Inverter reset (NO contact)	The contact is closed while the converter unit is resetting.
	SU	Signal output for frequency setting value/current value comparison	The SU output supports a monitoring of frequency setting value and frequency current value. The output is switched low, once the frequency current value (output frequency of the inverter) approaches the frequency setting value (determined by the setting value signal) within a preset range of tolerance.
	IPF	Signal output for instantaneous power failure	The output is switched low for a temporary power failure within a range of 15 ms ≤tIPF ≤100 ms or for under voltage.
	FAN ①	Cooling fan fault	Switched to LOW when a cooling fan fault occurs.
	OL	Signal output for overload alarm	The OL is switched low, if the output current of the inverter exceeds the current limit preset in parameter 22 and the stall prevention is activated. If the output current of the inverter falls below the current limit preset in parameter 22, the signal at the OL output is switched high.
	FU	Signal output for monitoring output frequency	The output is switched low once the output frequency exceeds a value preset in parameter 42 (or 43). Otherwise the FU output is switched high.
	SE	Reference potential for signal outputs	The potential that is switched via open collector outputs RUN, SU, OL, IPF and FU is connected to this terminal.
	CA	Analog current output	One of 18 monitoring functions can be selected, e.g. external frequency output. CA- and AM output can be used simultaneously. The functions are determined by parameters. Output item: output frequency (initial setting), Load impedance: 200 Ω–450 Ω, output signal: 0–20 mA
	AM	Analog signal output 0–10 V DC (1 mA)	Output item: output frequency (initial setting), output signal 0–10 V DC, permissible load current 1 mA (load impedance ≥10 kΩ), resolution 8 bit
Interface	—	PU connector	A parameter unit can be connected. Communications via RS485 I/O standard: RS485, multi drop operation: max 1152 baud (overall length: 500 m)
	—	RS485 terminal (via RS485 terminal)	Communications via RS485; I/O standard: RS485, multi drop operation: max 1152 baud (overall length: 500 m)
	—	2 USB connectors (Conforms to USB1.1/USB2.0)	USB A connector: a USB memory device enables parameter copy, PLC code download and trace function. USB mini B connector: connected to a personal computer via USB to enable operations of the inverter by FR Configurator2.
Safety connection	S1, S2	Safety inputs	When the safety functions are not used, the existing jumpers between the terminals S1-PC, S2-PC and SIC-SD must not be removed, otherwise an operation of the frequency inverter is not possible.
	SIC	Reference potential for safety inputs	
	SO	Safety monitor output	
	SOC	Safety monitor output common	

① only for FR-CC2

Parameter Overview

For simple variable-speed operation of the inverter, the initial setting of the parameters may be used as they are.

Set the necessary parameters to meet the load and operational specifications.

Parameter setting, change and check can be made from the parameter unit or by the Software FR Configurator (FR-700) and FR Configurator2 (FR-800) (see page 67 for more details).

The following list is an overview on the capabilities and functions of each inverter. For details of parameters, refer to the appropriate instruction manual see https://eu3a.mitsubishielectric.com.

Function	FR-D700 SC	FR-E700 SC	FR-F700	FR-A700	FR-A800
2nd parameter settings	●	●	●	●	●
3rd parameter settings	—	—	—	●	●
Restart	●	●	●	●	●
Vector control	●	●	●	●	●
Adjustable 5 points V/f	—	—	●	●	●
Orientation control	—	—	—	●	●
Encoder feedback	—	—	—	●	●
Pulse train input	—	—	—	●	●
Conditional position feed function	—	—	—	●	●
Torque command	—	—	—	●	●
Torque limit	—	—	—	●	●
Torque bias	—	—	—	●	●
Speed limit	—	—	—	●	●
Easy gain tuning	—	—	—	●	●
Adjustment function	—	—	—	●	●
PLC function	—	—	●	●	●
PID control	●	●	●	●	●
Commercial power supply switch-over	—	—	●	●	●
Backlash	—	—	●	●	●
Variable current limiting	●	●	●	●	●
Output current detection	●	●	●	●	●
User functions	—	●	●	●	●
Terminal functions selection	●	●	●	●	●
Multi-speed setting	●	●	●	●	●
Help functions	●	●	●	●	●
Slip compensation	●	●	●	●	●
Lifetime detection	●	●	●	●	●
Power failure stop	●	●	●	●	●
Load torque high speed frequency control	—	—	—	●	●
External brake control	—	●	—	●	●
Droop control	—	●	—	●	●
Password lock	●	—	—	●	●
Remote outputs	●	●	●	●	●
Maintenance functions	●	●	●	●	●
Current average monitor	●	●	●	●	●
Speed smoothing control	●	●	—	—	●
PID Sleep function	●	—	●	—	●
Advanced PID control	—	—	●	—	●
Traverse function	●	—	●	●	●
Anti sway function	—	—	—	—	●
Regeneration avoidance function	●	●	●	●	●
Free parameter	●	●	●	●	●
Energy saving monitor	—	—	●	●	●
Calibration function	●	●	●	●	●
Analog current output calibration function	—	—	●	●	●
PTC input	●	—	●	●	●
Pre-charge function	—	—	●	—	●
24 V power supply	—	—	—	—	●
Increased magnetic excitation deceleration	—	—	—	—	●
PM motor control	—	—	—	—	●

Remark:
For an overview of all parameters, refer to the inverter manual.

Setting Parameters (Example)

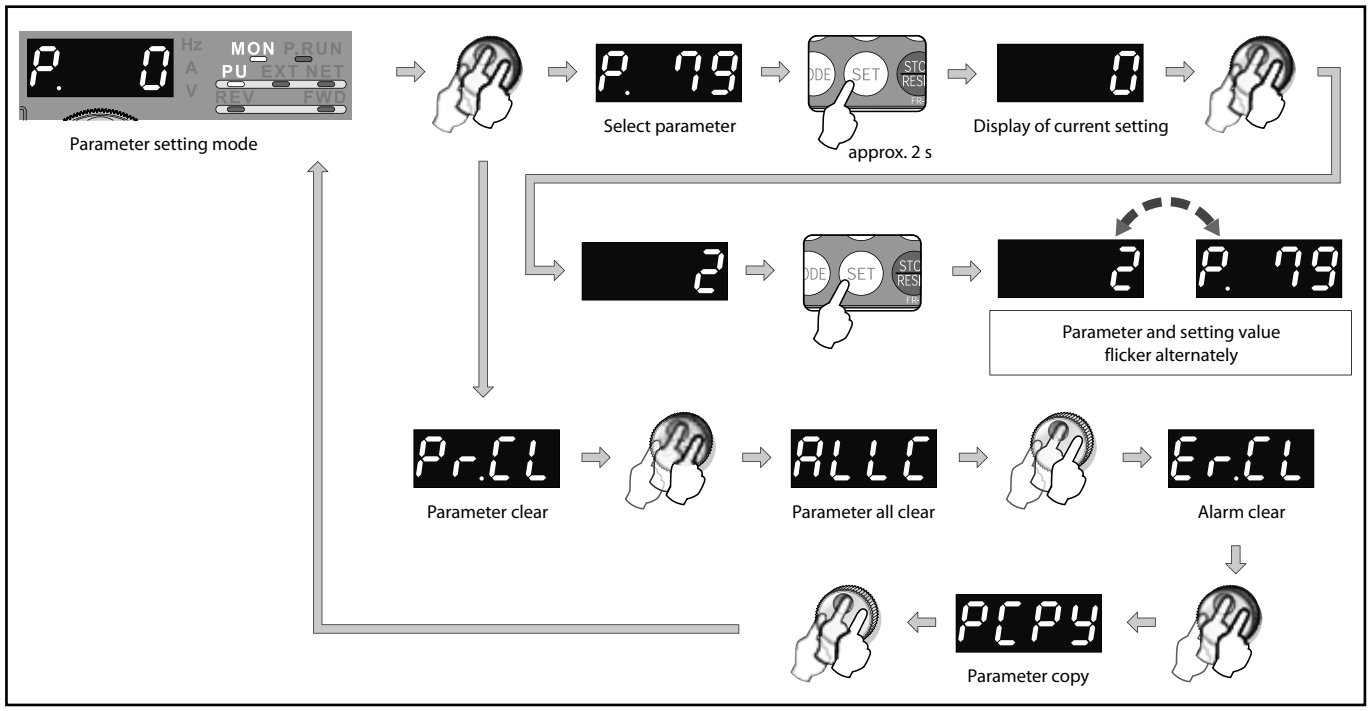

General Operating Conditions for all Inverters

Specifications	FR-D700 SC	FR-E700 SC	FR-F700	FR-A700	FR-A800
Ambient temperature in operation	-10 °C to +50 °C (non-freezing)	-10 °C to +50 °C (non-freezing)	FR-F740: -10 °C to +50 °C; FR-F746: -10 °C to +40 °C (non-freezing) ①	-10 °C to +50 °C (non-freezing)	-10 °C to +50 °C (non-freezing)
Storage temperature ②	-20 °C to +65 °C	-20 °C to +65 °C	-20 °C to +65 °C	-20 °C to +65 °C	-20 °C to +65 °C
Ambient humidity	Max. 90 % (non-condensing)	Max. 90 % (non-condensing)	Max. 90 % (non-condensing)	Max. 90 % (non-condensing)	Max. 95 % (non-condensing)
Altitude	Max. 1000 m above sea level ③	Max. 1000 m above sea level ③	Max. 1000 m above sea level	Max. 1000 m above sea level	Max. 1000 m above sea level
Protective structure	Enclosed type IP20	Enclosed type IP20	FR-F740: IP00/IP20 ④ FR-F746: IP54	FR-A741/FR-A770: IP00	FR-A840: IP00/IP20
Shock resistance	10 g (3 times each in 3 directions)	10 g (3 times each in 3 directions)	10 g (3 times each in 3 directions)	10 g (3 times each in 3 directions)	10 g (3 times each in 3 directions)
Vibration resistance	Max. 5.9 m/s^2	Max. 5.9 m/s^2	Max. 5.9 m/s^2 (max. 2.9 m/s^2 for the 04320 or above)	Max. 5.9 m/s^2 (max. 2.9 m/s^2 for the FR-A770)	Max. 5.9 m/s^2 (max. 2.9 m/s^2 for the 04320 or above and FR-A842)
Ambient conditions	For indoor use only, avoid environments containing corrosive gases, install in a dust-free location.	For indoor use only, avoid environments containing corrosive gases, install in a dust-free location.	For indoor use only (F740), avoid environments containing corrosive gases, install in a dust-free location.	For indoor use only, avoid environments containing corrosive gases, install in a dust-free location.	For indoor use only, avoid environments containing corrosive gases, install in a dust-free location.
Approvals	UL/CSA/CE/EN/GOST/CCC	UL/CSA/CE/EN/GOST/CCC	FR-F740: CE/UL/cUL/DNV/GOST; FR-F746: CE/GOST/CCC	FR-A741: CE/UL/cUL/GOST/CCC FR-A770: CE/GOST/CCC	CE/UL/cUL/GOST/CCC

Remarks:
① For selection of the load characteristics with a 120 % overload rating the max. temperature is 40 °C (F740) and 30 °C (F746).
② The product may only be exposed to the full extremes of this temperature range for short periods (e.g. during transportation).
③ After that derate by 3 % for every extra 500 m up to 2500 m.
④ When the cable bushing for the optional expansion cards is broken out the unit has an IP00 protection rating.

Example System Configuration (FR-A800)

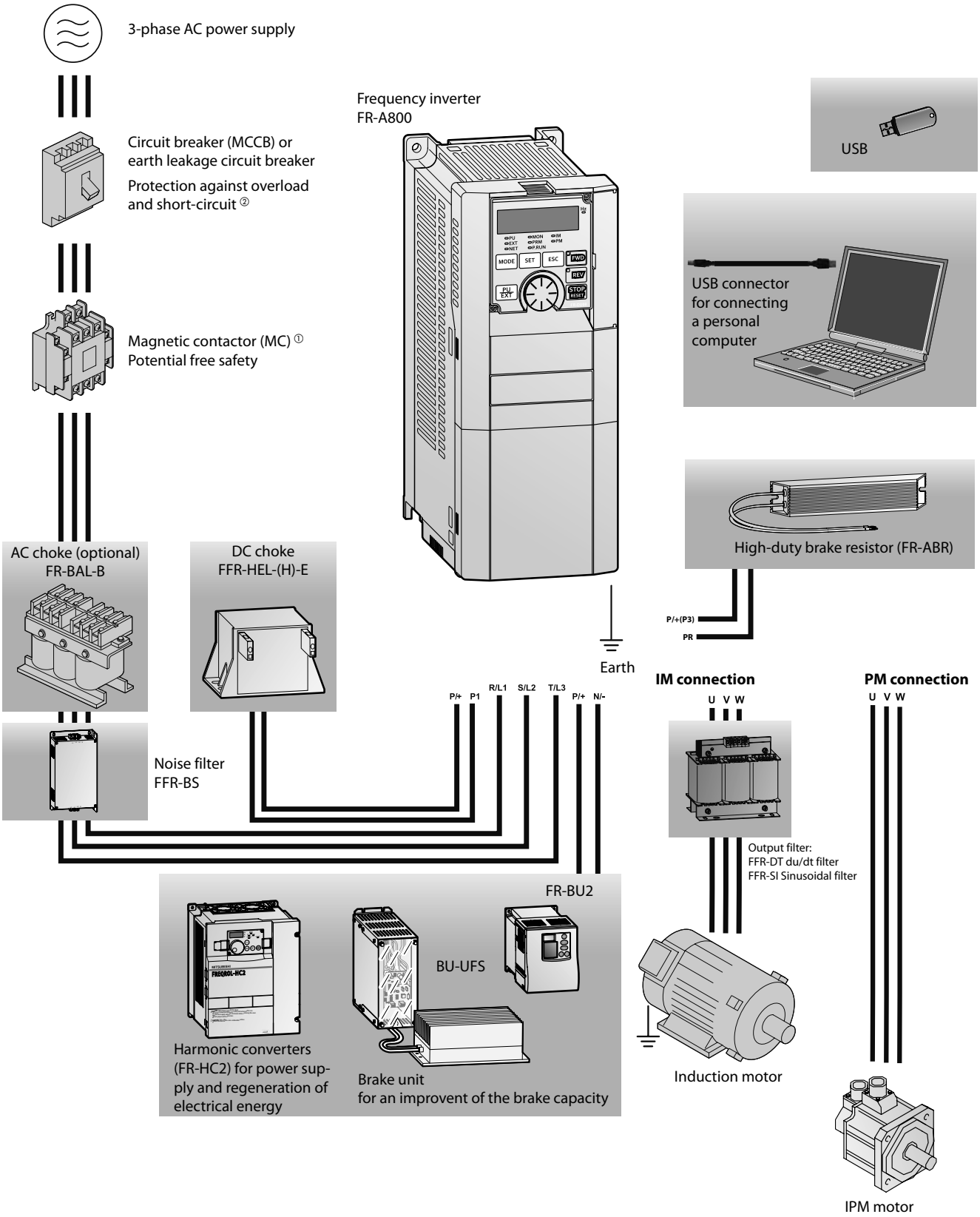

Remark:
① For combinations of circuit breakers and magnetic contactors depending on the motor capacity refer to the manual of the frequency inverter.
② Use RCD type "B" for earth leakage protection with 3~ power supply.

Example System Configuration (FR-A842)

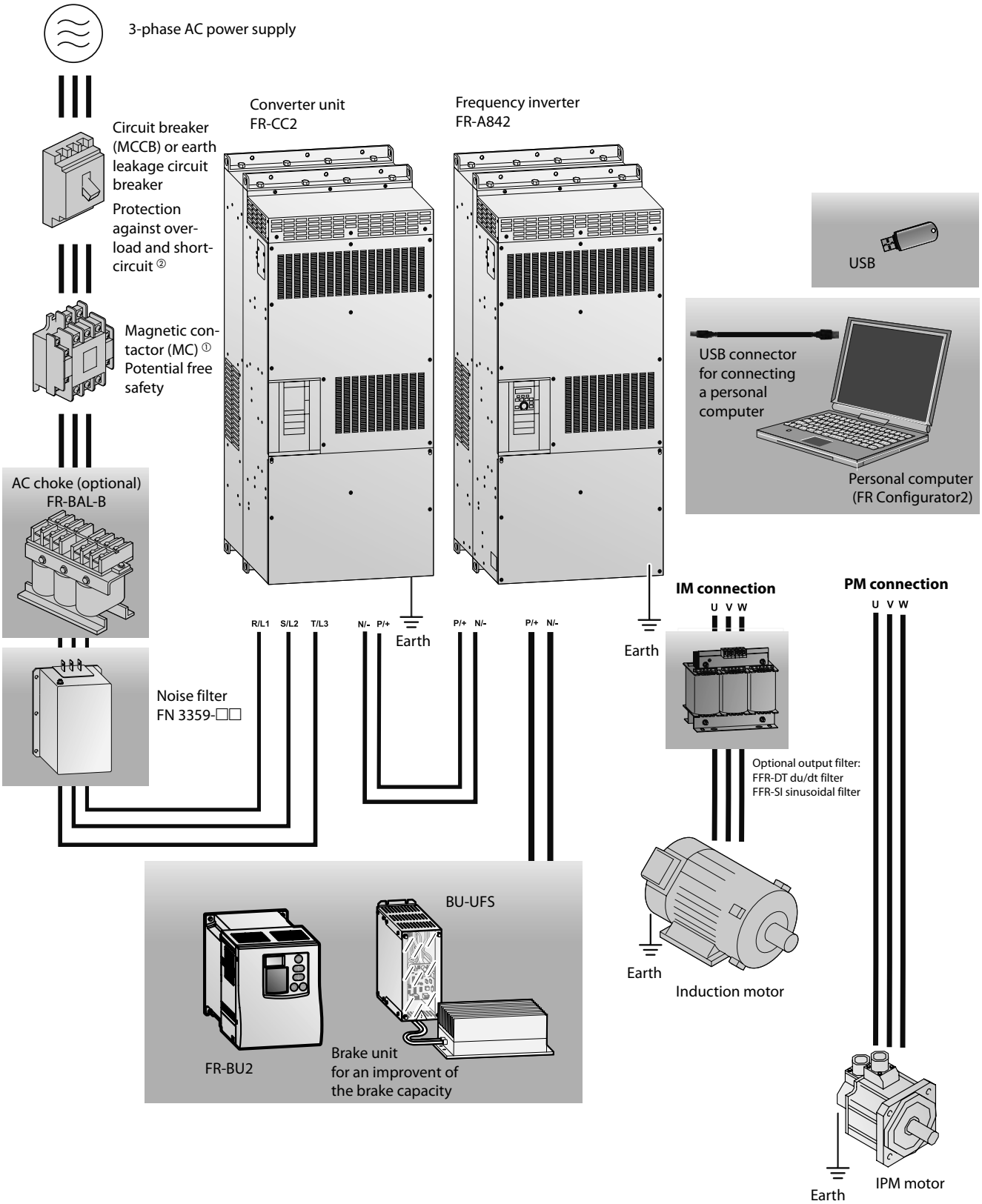

Remark:
① For combinations of circuit breakers and magnetic contactors depending on the motor capacity refer to the manual of the frequency inverter.
② Use RCD type "B" for earth leakage protection with 3~ power supply.

Internal and External Options

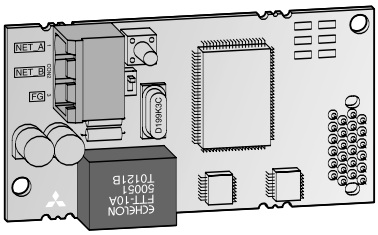

A large number of options allows an individual adoption of the inverter to the according task. The options can be installed quickly and easily. Detailed information on installation and functions is included in the manual of the options.

The options can be divided into two major categories:

- Internal options
- External options

Internal options

The internal options comprise input and output extensions as well as communications options supporting the operation of the inverter within a network or connected to a personal computer or PLC.

External Options

In addition to the parameter unit that enables interactive operation of the frequency inverter the available external options also include additional EMC noise filters, chokes for improving efficiency and brake units with brake resistors.

Option			Description	FR-D700 SC	FR-E700 SC	FR-F700	FR-A700	FR-A800	FR-HC2
Internal options	Digital input		Input of the frequency setting via BCD or binary code	—	●	●	●	●	—
	Digital output		Selectable standard output signals of the inverter can be output at the open collector.	—	●	●	●	●	—
	Expansion analog output		Selectable additional signals can be output and indicated at the analog output.	—	●	●	●	●	—
	Relay output		Selectable standard output signals of the inverter can be output through relay terminals.	—	●	●	●	●	—
	Orientation control, encoder feedback (PLG), vector and master slave control		These options are used for position control, precise speed control and master/slave control.	—	—	—	●	●	—
	Communications	CC-Link	Integration of a frequency inverter into a CC-Link.	—	●	●	●	●	●
		CC-Link IE Field	Integration of a frequency inverter into a CC-Link IE Field network.	—	—	—	●	●	—
		BACnet IP	Integration of a frequency inverter into a BACnet IP network.	—	—	●	●	—	●
		Modbus TCP	Integration of a frequency inverter into a Modbus TCP network.	—	—	●	●	—	●
		Ethernet IP	Integration of a frequency inverter into a Ethernet IP network.	—	—	●	●	●	●
		LonWorks	Integration of a frequency inverter into a LonWorks network.	—	●	●	●	●	—
		Profibus DPV1	Integration of a frequency inverter into a Profibus DPV1 network.	—	—	—	—	●	—
		Profibus DP PPO	Integration of a frequency inverter into a Profibus DP PPO network.	—	●	●	●	●	—
		Profinet	Integration of a frequency inverter into a Profinet network.	—	—	●	●	●	●
		DeviceNet	Integration of a frequency inverter into a DeviceNet.	—	●	●	●	●	—
		SSCNETIII	Integration of a frequency inverter into a SSCNETIII.	—	—	—	●	—	—
		RS485 multi-protocol	RS485 multi-protocol interface card	—	—	●	●	—	●

Option		Description	FR-D700 SC	FR-E700 SC	FR-F700	FR-A700	FR-A800
External options	Parameter unit (8 languages)	Interactive parameter unit with LC display.	●	●	●	●	●
	FR-Configurator software	Parameterization and setup software for the Mitsubishi Electric inverter series.	●	●	●	●	●
	EMC noise filter	Noise filter for compliance with EMC directives.	●	●	●	●	●
	Brake unit	For an improvement of the brake capacity. For high inertia loads and active loads. Used in combination with a resistor unit.	●	●	●	●	●
	External high-duty brake resistor	To improve the brake capacity; used in combination with the internal brake transistor.	●	●	—	●	●
	DC choke AC chokes	For increased efficiency, reduction of mains feedback and compensation of voltage fluctuations.	●	●	●	●	●
	Floor standing unit FSU	IP20 physical contact protection in a freely-locatable floor-standing unit. Detailed information on request.	—	—	●	●	●
	Filter module	Passive harmonic filter to reduce mains pollution	●	●	●	●	●
	Regenerative unit	Regeneration of electrical energy in short-term operation (ED <50 %)	●	●	●	●	●
	Regenerative unit	Regeneration of electrical energy in short-term operation (ED =100 %)	●	●	●	●	●
	Harmonic Converter	For power supply and regeneration of electrical energy (ED = 100 %)	●	●	●	●	●
	Communications Profibus DP	High speed converter for Profibus DP to RS485 inverter protocol	●	●	●	●	●

Overview Internal Options

Internal options		Description	Remarks/Specifications	Type	Applicable inverter	Art. no.
16 digital inputs		Interface for the input of the frequency setting via 3-digit or 4-digit BCD or 12-bit or 16-bit binary code, setting of gain and bias supported	Input: 24 V DC; 5 mA; open collector or switching signal, sink or source logic	FR-A7AX	FR-F700 FR-A700	156775
				FR-A7AX-Ekit-SC-E	FR-E700 SC	239641
				FR-A8AX	FR-A800	269426
7 digital outputs 2 analog outputs		Selectable among 43 standard output signals of the inverter can be output at the open collector. The outputs are isolated with optocouplers. Selectable among 37 standard monitor signals of the inverter can be output at the analog outputs.	Ouput load: 24 V DC; 0.1 A, source or sink logic Output: max. 0–10 V DC; 0–20 mA; Resolution: 3 mV at voltage output, 10 µA at current output, accuracy: ±10 %	FR-A7AY	FR-F700 FR-A700	156776
				FR-A7AY-Ekit-SC-E	FR-E700 SC	239642
				FR-A8AY	FR-A800	269427
3 relay outputs		Selectable among 43 standard output signals of the inverter can be output through the isolated relay terminals.	Switching load: 230 V AC/0.3 A, 30 V DC/0.3 A	FR-A7AR	FR-F700 FR-A700	156777
				FR-A7AR-Ekit-SC-E	FR-E700 SC	239643
				FR-A8AR	FR-A800	269428
1 analog output 1 analog input		Selectable among 24 analog output signals Analog input of torque and speed related data Selectable among 37 standard monitor signals of the inverter can be output at the analog output.	Bipolar analog output max. 0–(±)10 V DC Bipolar analog input (16 bit) 0–(±)10 V DC	FR-A7AZ	FR-A700	191401
Encoder power supply		Control terminal block with integrated power supply	12 V DC	FR-A7PS	FR-A700	191399
Vector control with encoder feedback		Closed loop vector control with encoder can be performed. Encoder feedback enables high-precision speed, torque and position control.	5 V TTL differential 1024–4096 pulse 11–30 V HTL complimentary	FR-A7AP	FR-A700	166133
				FR-A8AP	FR-A800	269429
Master-Slave control		Closed loop vector control with encoder can be performed. Master-Slave position and speed synchronisation are possible with command pulse scaling and position control.		FR-A7AL	FR-A700	191402
Communi-cations	CC-Link	Option board for the integration of a frequency inverter into a CC-Link network.	Maximum transfer distance: 1200 m (at 156 kBaud)	FR-A7NC	FR-F700 FR-A700	156778
				FR-A7NC-Ekit-SC-E	FR-E700 SC	239644
				FR-A8NC	FR-A800	269431
			CC-Link connectors	A6CON-L5P		168347
	CC-Link IE Field	Option board for the integration of a frequency inverter into a CC-Link IE Field network	Maximum transfer rate: 1 GBaud	FR-A7NCE	FR-A700	244993
				FR-A8NCE	FR-A800	273102
	Ethernet multi-protocol	Ethernet multi-protocol interface card, Modbus TCP, Ethernet/IP, Profinet, BACnet to Modbus RTU		FR-A7N-ETH	FR-A700 FR-F700	212369
		WiFi Ethernet multi-protocol interface card, Modbus TCP, Ethernet/IP, BACnet, MELSEC ABCSP to Modbus RTU		FR-A7N-WiE	FR-A700 FR-F700	264932
	Ethernet/IP	Option board for integration of a frequency inverter in an Ethernet/IP network. Webserver for easy setup is included.	Ethernet with 2 RJ45 ports	A8NEIP_2P	FR-A800	262950
	LonWorks	Option board for integration of a frequency inverter in a LonWorks network.	Connection of up to 64 inverters supported. Maximum transfer rate: 78 kBaud	FR-A7NL	FR-F700 FR-A700	156779
				FR-A7NL-Ekit-SC-E	FR-E700 SC	239645
	Profibus DPV1	Option board for the integration of a frequency inverter into a Profibus DPV1 network, including cyclic and acyclic communication with drive profile	D-Sub Interface	A8NDPV1	FR-A800	262948
	Profibus DP	Option board for the integration of a frequency inverter into a Profibus DP network.	Connection of up to 126 inverters supported. Maximum transfer rate: 12 MBaud	FR-A7NP	FR-F700 FR-A700	158524
				FR-A8NP	FR-A800	274514
				FR-A7NP-Ekit-SC-E (Terminals)	FR-E700 SC	239646
				FR-A7NP-Ekit-01-E (D-Sub9)		273138
			D-Sub9 connection adapter for FR-A7NP	FR-D-Sub9-A7NP-1	FR-F700 FR-A700	251195
	Profinet	Option board for the integration of a frequency inverter into a Profinet network. Siemens drives profile is supported. Webserver for easy setup is included.	Profinet with 2 RJ45 ports	A8NPRT_2P	FR-A800	262949
	DeviceNet™	Option board for the integration of a frequency inverter into a DeviceNet.	Maximum transfer rate: 10 MBaud	FR-A7ND	FR-F700 FR-A700	158525
				FR-A7ND-Ekit-SC-E	FR-E700 SC	239648
				FR-A8ND	FR-A800	269432
	SSCNETIII	Option board for the integration of a frequency inverter into the Mitsubishi Electric servo system network SSCNETIII. The operation and display functions can be controlled by Motion Controller (Q172H CPU, Q173H CPU).	Maximum transfer rate: 50 MBaud	FR-A7NS	FR-A700	191403
	RS485 multi-protocol	RS485 multi-protocol interface option board; Siemens FLN and Metasys N2		FR-A7N-XLT	FR-F700, FR-A700	208972

Overview External Options

External options	Description	Remarks/Specifications	Type	Applicable inverter	Art. no.
Parameter unit	Interactive standard parameter unit with copy function	For mounting on the switchgear cabinet door (for instance) Refer to page 50 for details.	FR-DU07	All	157514
	Interactive standard parameter unit with copy function, protection level IP54		FR-DU07-IP54	All	207067
	Interactive parameter unit with LC display (8 languages) with copy function.		FR-PU07	All	166134
	Interactive parameter unit like FR-PU07 with additional HAND/AUTO keys and advanced PID monitor		FR-PU07-01	FR-F700	242151
	Interactive parameter unit with LC display and battery pack		FR-PU07BB-L	FR-E700 SC FR-A700 FR-A800	157515
	Interactive standard parameter unit with copy function		FR-PA07	FR-D700 SC FR-E700 SC	214795
	Grafical full text LCD display, including E-Manual, multilanguage and copy function.		FR-LU08	FR-A800	274525
Adapter	Connection adapter for FR-DU07	Required for remote connection of the FR-DU07 with FR-A5CBL	FR-ADP	FR-A700 FR-F700	157515
Connection cable for remote parameter unit	Cable for a remote connection of a parameter unit	Available length: 1; 2.5 and 5 m	FR-A5 CBL	All	1 m: 70727 2.5 m: 70728 5 m: 70729
Installation kit for external air cooling	For installation of the heatsink on the switchgear cabinet door	Reduces temperature in switchgear cabinet of about 2/3	FR-A7CN	FR-A700 FR-F700	refer to page 57
Distributor module for RJ45 connections	Distributor for connection of multiple inverters in a serial network	For up to 2 frequency inverters	FR-RJ45-HUB4	All	167612
		For up to 8 frequency inverters	FR-RJ45-HUB10		167613
	Terminating resistor for RJ45	120 Ω	FR-RJ45-TR	All	167614
Interface cable	Communications cable for RS232 or RS485 interface to connect an external personal computer	Length 3 m	SC-FR PC	All	88426
USB-RS232 converter	Port converter adapter cable from RS232 to USB	USB specification 1.1, 0.35 m long	USB-RS232	FR-D700 SC FR-F700	155606
FR Configurator FR Configurator2	Parametrisation and PLC function programming software for Mitsubishi Electric inverter.	Refer to page 67 for details.	—	All	275503
EMC noise filter	Noise filter for compliance with EMC directives.	Refer to page 53 for details.	FFR-□□, FR-, FN-□□	All	refer to page 53
du/dt filter	Output filter for du/dt reduction	Refer to page 55 for details.	FFR-DT-□□A-SS1	All	refer to page 55
Sinusoidal filter	Output filter for sine wave output voltage	Refer to page 56 for details.	FFR-SI-□□A-SS1	All	refer to page 56
AC chokes	For increased efficiency, reduction of mains feedback and compensation of voltage fluctuations.	Refer to page 58 for details.	FR-BAL-B	FR-D700 SC, FR-E700 SC, FR-F700, FR-A700 FR-A800	refer to page 58
DC chokes	DC choke for compensation of voltage fluctuations.	for connection up to 55 kW motor capacity	FFR-HEL-(H)-E	FR-D700 SC, FR-E700 SC, FR-F700, FR-A700 FR-A800	refer to page 59
		for connection from 75 kW motor capacity	FR-HEL-(H) ①	FR-A800	refer to page 59
Filter module	Passive harmonic filter to reduce mains pollution	<5 % THDi to <16 % THDi	on request	All	on request
Regenerative unit	Regeneration of electrical energy in short-term operation	(ED <50 %)	on request	All	
Regenerative unit	Regeneration of electrical energy in short-term operation	(ED = 100 %)	on request	All	
Harmonic Converter	For power supply and regeneration of electrical energy for one or several frequency inverters and class leading harmonics filtration.	THDi <4 %	FR-HC2	All	refer to page 63
Brake units	For an improvement of the brake capacity. For high inertia loads and active loads. Used in combination with a resistor unit.	Refer to page 61 for details.	FR-BU2	All	refer to page 61
		Refer to page 61 for details.	BU-UFS + RUFC	FR-D700 SC, FR-E700 SC, FR-F700, FR-A700	refer to page 61
External high-duty brake resistor	To improve the brake capacity of the inverter; used in combination with the internal brake transistor	Refer to page 62 for details.	FR-ABR(H)	FR-D700 FR-E700 SC-EC, FR-A800	refer to page 62
Communi-cations Profibus DP	High speed converter for Profibus DP to RS485 inverter protocol	Base unit with 8 ports	PBDP-GW-G8	All	224915
		Extension unit with 8 ports	PBDP-GW-E8	All	224916
Floor standing unit FSU	A floor standing unit enables fast and trouble-free installation	Ensure IP20 Level and integration of high level EMC Filter and DC choke	FR-FSU	FR-F700	refer to page 57

① This choke is essential for operation and must be installed. It has to be ordered according to the application.

EMC

1st and 2nd environment

Different interference levels are permissible depending on the place of use. Differentiation is made between 1st and 2nd environment. The first environment includes residential and business areas which are connected directly to the low-voltage network, i.e. which are not supplied via dedicated highvoltage or medium-voltage transformers. In contrast, the second environment is not connected directly to the public low-voltage network. The second environment is also referred to as the industrial environment.

Norms and directives

The limits for the respective environments are specified in norms. The environmental norm EN 55011 defines the limits of the basic environments in the industrial area with Classes A1 and A2 and in the residential area with Class B. In addition, the product norm EN 61800-3 for electrical drive systems, which defines the new categories C1 to C4, has been in force since June 2007.

These days, the operator or user of the system is responsible for complying with the statutory directives and norms. With the help of solutions provided by the manufacturer, he must ensure that any interference which occurs is eliminated. Mitsubishi Electric offers a wide range of EMC filters, chokes, harmonic filters and much more, which are optimised for use with the appropriate inverter. To ensure that all units are capable of fulfilling their function without interference, the user of the system must also take into account the connection requirements of the local power supply company.

Product norm EN 61800-3 (2005-07) for electrical drive systems				
Assignment by category	C1	C2	C3	C4
Environment	1st environment	1st or 2nd environment (user's decision)		2nd environment
Voltage/Current	<1000 V			<1000 V; I_n >400 A , connection to IT network
EMC expertise	No requirements	Installation and commissioning by an EMC specialist		EMC plan required
Limit according to EN 55011	Class B	Class A1 (+ warning notice)	Class A2 (+ warning notice)	Values exceed Class A2

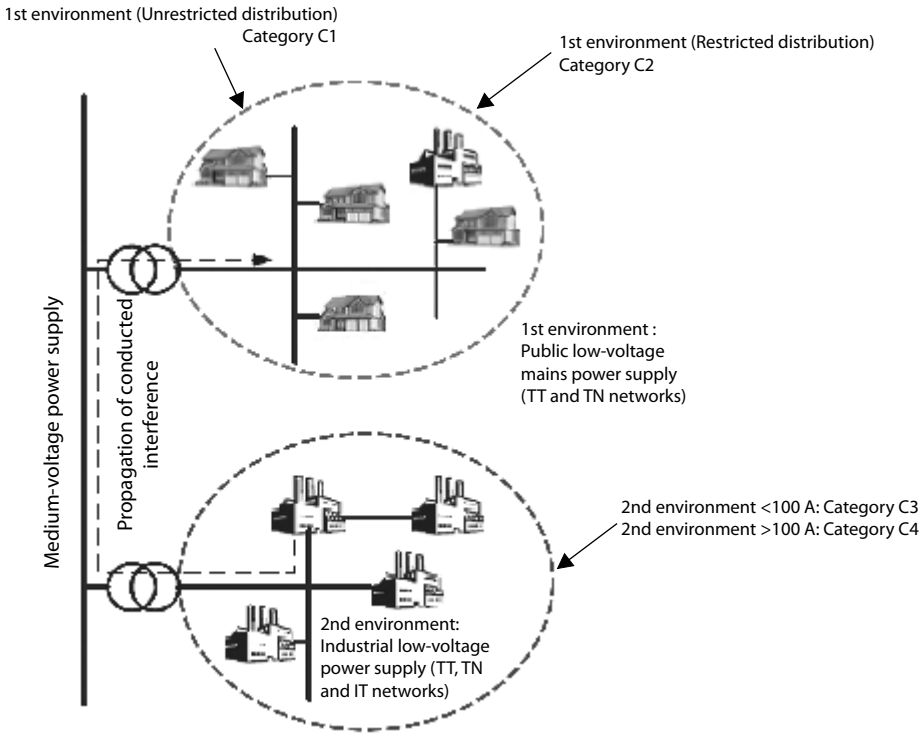

Overview of Noise Filters

No.	Frequency inverter (EC/E1/E6/2-60)	Noise filter for Environment 1 category C2 conforming 55011A	Art. no.	Noise filter for Environment 1 category C1 conforming 55022B	Art. no.
D1	FR-D720S-008–042SC	FFR-CS-050-14A-RF1	216227	FFR-CS-050-14A-RF1	216227
		FFR-CS-050-14A-RF1-LL	229801	FFR-CS-050-14A-RF1-LL	229801
D2	FR-D720S-070SC	FFR-CS-080-20A-RF1	216228	FFR-CS-080-20A-RF1	216228
		FFR-CS-080-20A-RF1-LL	229802	FFR-CS-080-20A-RF1-LL	229802
D3	FR-D720S-100SC	FFR-CS-110-26A-RF1	216229	FFR-CS-110-26A-RF1	216229
		FFR-CS-110-26A-RF1-LL	229803	FFR-CS-110-26A-RF1-LL	229803
D4	FR-D740-012–036SC	FFR-CSH-036-8A-RF1	215007	FFR-CSH-036-8A-RF1	215007
		FFR-CSH-036-8A-RF1-LL	226836	FFR-CSH-036-8A-RF1-LL	226836
D5	FR-D740-050/080SC	FFR-CSH-080-16A-RF1	215008	FFR-CSH-080-16A-RF1	215008
		FFR-CSH-080-16A-RF1-LL	226837	FFR-CSH-080-16A-RF1-LL	226837
D6	FR-D740-120/160SC	FFR-MSH-170-30A-RF1	215005	FFR-MSH-170-30A-RF1	215005
		FFR-MSH-170-30A-RF1-LL	226838	FFR-MSH-170-30A-RF1-LL	226838
		FFR-MSH-170-30A-RB1-LL	261978	FFR-MSH-170-30A-RB1-LL	261978
E1	FR-E720S-008–030SC	FFR-CS-050-14A-RF1	216227	FFR-CS-050-14A-RF1	216227
		FFR-CS-050-14A-RF1-LL	229801	FFR-CS-050-14A-RF1-LL	229801
E2	FR-E720S-050/080SC	FFR-CS-080-20A-RF1	216228	FFR-CS-080-20A-RF1	216228
		FFR-CS-080-20A-RF1-LL	229802	FFR-CS-080-20A-RF1-LL	229802
E3	FR-E720S-110SC	FFR-CS-110-26A-RF1	216229	FFR-CS-110-26A-RF1	216229
		FFR-CS-110-26A-RF1-LL	229803	FFR-CS-110-26A-RF1-LL	229803
E4	FR-E740-016–040SC	FFR-MSH-040-8A-RF1	214953	FFR-MSH-040-8A-RF1	214953
E5	FR-E740-060/095SC	FFR-MSH-095-16A-RF1	215004	FFR-MSH-095-16A-RF1	215004
E6	FR-E740-120/170SC	FFR-MSH-170-30A-RF1	215005	FFR-MSH-170-30A-RF1	215005
		FFR-MSH-170-30A-RF1-LL	226838	FFR-MSH-170-30A-RF1-LL	226838
		FFR-MSH-170-30A-RB1-LL	261978	FFR-MSH-170-30A-RB1-LL	261978
E7	FR-E740-230/300SC	FFR-MSH-300-50A-RF1	215006	FFR-MSH-300-50A-RF1	215006
AF1	FR-A840/F740-00023–00126	FFR-BS-00126-18A-SF100	193677	FFR-BS-00126-18A-SF100	193677
AF2	FR-A840/F740-00170/00250	FFR-BS-00250-30A-SF100	193678	FFR-BS-00250-30A-SF100	193678
AF3	FR-A840/F740-00310/00380	FFR-BS-00380-55A-SF100	193679	FFR-BS-00380-55A-SF100	193679
AF4	FR-A840/F740-00470/00620	FFR-BS-00620-75A-SF100	193680	FFR-BS-00620-75A-SF100	193680
AF5	FR-A840/F740-00770	FFR-BS-00770-95A-SF100	193681	FFR-BS-00770-95A-SF100	193681
AF6	FR-A840/F740-00930	FFR-BS-00930-120A-SF100	193682	FFR-BS-00930-120A-SF100	193682
AF7	FR-A840/F740-01160/01800	FFR-BS-01800-180A-SF100	193683	FFR-BS-01800-180A-SF100	193683
AF8	FR-A840/F740-02160/02600	FN3359-250-28	104663		
AF9	FR-A840/F740-03250–04320	FN3359-400-99	104664		
AF10	FR-A840/F740-04810–06100	FN3359-600-99	104665		
AF11	FR-A840/F740-06830 FR-CC2-500K/F740-09620	FN3359-1000-99	104666		
AF12	FR-F740-10940/12120	FN3359-1600-99	130229		
F1	FR-F746-00023–00126	FFR-AF-IP54-21A-SM2	201551	FFR-AF-IP54-21A-SM2	201551
F2	FR-F746-00170–00250	FFR-AF-IP54-44A-SM2	201552	FFR-AF-IP54-44A-SM2	201552
F3	FR-F746-00310–00380	FFR-AF-IP54-62A-SM2	201553	FFR-AF-IP54-62A-SM2	201553
F4	FR-F746-00470–00620	FFR-AF-IP54-98A-SM2	201704	FFR-AF-IP54-98A-SM2	201704
F5	FR-F 746-00770	FFR-AF-IP54-117A-SM2	201705	FFR-AF-IP54-117A-SM2	201705
F6	FR-F746-00930–01160	FFR-AF-IP54-172A-SM2	201706	FFR-AF-IP54-172A-SM2	201706
A1	FR-A741-5.5K/7.5K	FFR-RS-7.5K-27A-EF100	227840	FFR-RS-7.5K-27A-EF100	227840
A2	FR-A741-11K/15K	FFR-RS-15K-45A-EF100	227841	FFR-RS-15K-45A-EF100	227841
A3	FR-A741-18.5K/22K	FFR-RS-22K-65A-EF100	227842	FFR-RS-22K-65A-EF100	227842
A4	FR-A741-30K/37K/45K	FFR-RS-45K-127A-EF100	227843	FFR-RS-45K-127A-EF100	227843
A5	FR-A741-55K	FFR-RS-55K-159A-EF100	227844	FFR-RS-55K-159A-EF100	227844
A6	FR-A770-355K-79	FFR-VBS-690V-600A-RB100	269407	FFR-VBS-690V-600A-RB100	269407
A7	FR-A770-560K-79	FFR-VBS-690V-800A-RB100	269406	FFR-VBS-690V-800A-RB100	269406

Remark:
The frequency inverters of the FR-F740/FR-F746 series are equipped with a built-in EMC filter for industrial environment (2nd environment). The filters shown in the table above are required for special cases only.

■ Noise Filters for FR-D700 SC

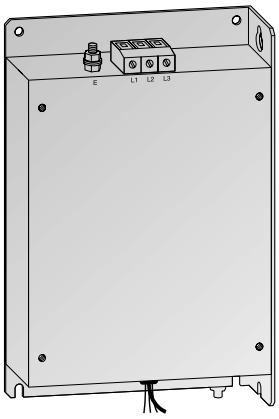

Filter	Frequency inverter	Power loss [W]	Rated current [A]	Leakage current [mA]	Weight [kg]	Art. no.
FFR-CS-050-14A-RF1	FR-D720S-008–042SC	9	14	<30	0.4	216227
FFR-CS-050-14A-RF1-LL	FR-D720S-008–042SC	9	14	<3.5	0.4	229801
FFR-CS-080-20A-RF1	FR-D720S-070SC	13	20	<30	0.6	216228
FFR-CS-080-20A-RF1-LL	FR-D720S-070SC	13	20	<3.5	0.6	229802
FFR-CS-110-26A-RF1	FR-D720S-100SC	18	26	<30	0.8	216229
FFR-CS-110-26A-RF1-LL	FR-D720S-100SC	18	26	<3.5	0.8	229803
FFR-CSH-036-8A-RF1	FR-D740-012–036SC	6	8	<30	0.9	215007
FFR-CSH-036-8A-RF1-LL	FR-D740-012–036SC	6	8	<3.5	0.9	226836
FFR-CSH-080-16A-RF1	FR-D740-050/080SC	14	16	<30	1.9	215008
FFR-CSH-080-16A-RF1-LL	FR-D740-050/080SC	14	16	<3.5	1.9	226837
FFR-MSH-170-30A-RF1	FR-D740-120/160SC	42	30	<30	2.0	215005
FFR-MSH-170-30A-RF1-LL	FR-D740-120/160SC	42	30	<3.5	2.0	226838
FFR-MSH-170-30A-RB1-LL	FR-D740-120/160SC	42	30	<3.5	2.0	261978

The filters can provide conformity with following limits: C1 up to 25 m (LL types C1 up to 20 m), C2 up to 100 m

■ Noise Filters for FR-E700 SC

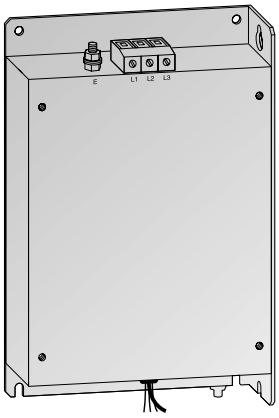

Filter	Frequency inverter	Power loss [W]	Rated current [A]	Leakage current [mA]	Weight [kg]	Art. no.
FFR-CS-050-14A-RF1	FR-E720S-008–030SC	9	14	<30	0.4	216227
FFR-CS-050-14A-RF1-LL	FR-E720S-008–030SC	9	14	<3.5	0.4	229801
FFR-CS-080-20A-RF1	FR-E720S-050/080SC	13	20	<30	0.6	216228
FFR-CS-080-20A-RF1-LL	FR-E720S-050/080SC	13	20	<3.5	0.6	229802
FFR-CS-110-26A-RF1	FR-E720S-110SC	18	26	<30	0.8	216229
FFR-CS-110-26A-RF1-LL	FR-E720S-110SC	18	26	<3.5	0.8	229803
FFR-MSH-040-8A-RF1	FR-E740-016-040SC	17	8	<30	1.1	214953
FFR-MSH-095-16A-RF1	FR-E740-060/095SC	26	16	<30	1.2	215004
FFR-MSH-170-30A-RF1	FR-E740-120/170SC	42	30	<30	2.0	215005
FFR-MSH-170-30A-RF1-LL	FR-E740-120/170SC	42	30	<3.5	2.0	226838
FFR-MSH-170-30A-RB1-LL	FR-E740-120/170SC	42	30	<3.5	2.0	261978
FFR-MSH-300-50A-RF1	FR-E740-230/300SC	26	50	<30	2.8	215006

The filters can provide conformity with following limits: C1 up to 25 m (LL types C1 up to 20 m), C2 up to 100 m

■ Noise Filters for FR-A840/F740-00023–01800

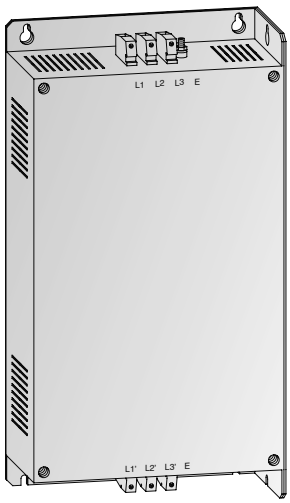

Filter	Frequency inverter	Power loss [W]	Rated current [A]	Leakage current [mA]	Weight [kg]	Art. no.
FFR-BS-00126-18A-SF100	FR-A840/F740-00023–00126	11.5	18	<30	1.25	193677
FFR-BS-00250-30A-SF100	FR-A840/F740-00170/00250	15.8	30	<30	1.8	193678
FFR-BS-00380-55A-SF100	FR-A840/F740-00310/00380	27.1	55	<30	2.42	193679
FFR-BS-00620-75A-SF100	FR-A840/F740-00470/00620	43.9	75	<30	4.25	193680
FFR-BS-00770-95A-SF100	FR-A840/F740-00770	45.8	95	<30	6.7	193681
FFR-BS-00930-120A-SF100	FR-A840/F740-00930	44.9	120	<30	10.0	193682
FFR-BS-01800-180A-SF100	FR-A840/F740-01160/01800	60.7	180	<30	12.0	193683

The filters can provide conformity with following limits: C1 up to 20 m, C2 up to 100 m, C3 up to 100 m
These filters are UL/cUL ertified.

■ Noise Filters for FR-A840/F740-02160–12120

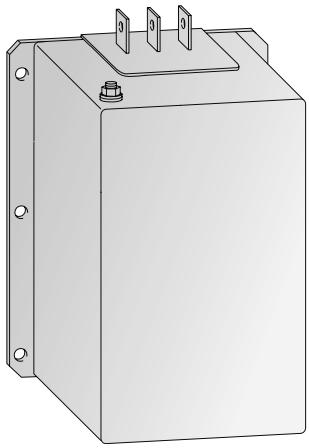

Filter	Frequency inverter	Power loss [W]	Rated current [A]	Leakage current [mA]	Weight [kg]	Art. no.
FN 3359-250-28	FR-A840/F740-02160/02600	38	250	<6	7	104663
FN 3359-400-99	FR-A840/F740-03250–04320	51	400	<6	10.5	104664
FN 3359-600-99	FR-A840/F740-04810–06100	65	600	<6	11	104665
FN 3359-1000-99	FR-A840/F740-06830 FR-CC2-500K/F740-09620	84	1000	<6	18	104666
FN 3359-1600-99	FR-F740-10940/12120	130	1600	<6	27	130229

The filters can provide conformity with following limits: C2 up to 100 m, C4 up to 100 m

■ Noise Filters for FR-F746-00023–01160

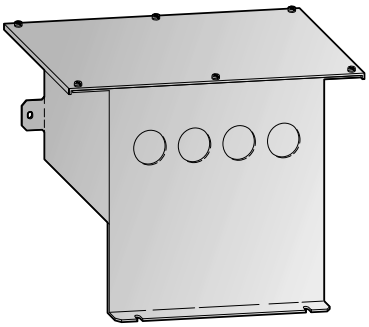

Noise Filters conforming to EN 61800-3

The noise filters listed below make it possible to comply with the requirements for Environment 1 (unrestricted distribution) with shielded motor cables up to 20 m long and the requirements of Environment 1 (restricted distribution) with shielded motor cables up to 100 m long. This also provides compliance with the 100 A limits for Environment 2 with shielded cables up to 100 m long.

They meet the emission requirements of EN 61800-3, Category C1 and EN 55011. The frequency inverters of the FR-F746 series are fitted with an integrated EMC noise filter for industrial environments (Environment 2). They meet the emission requirements of EN 61800-3.

Filter	Frequency inverter	Power loss [W]	Rated current [A]	Leakage current [mA]	Weight [kg]	Art. no.
FFR-AF-IP54-21A-SM2	FR-F746-00023–00126	9.26	21	<30	3.2	201551
FFR-AF-IP54-44A-SM2	FR-F746-00170–00250	20.3	44	<30	4.4	201552
FFR-AF-IP54-62A-SM2	FR-F746-00310–00380	23	62	<30	5.4	201553
FFR-AF-IP54-98A-SM2	FR-F746-00470–00620	51.8	98	<30	7.7	201704
FFR-AF-IP54-117A-SM2	FR-F746-00770	61.6	117	<30	10.6	201705
FFR-AF-IP54-172A-SM2	FR-F746-00930–01160	128.7	172	<30	16	201706

① Power dissipation at 20 °C and rated current with copper cables
The filters can provide conformity with following limits: C1 up to 20 m, C2 up to 100 m, C3 up to 100 m

■ Noise Filters for FR-A741-5.5K–55K

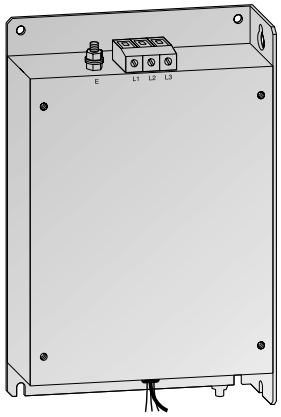

Filter	Frequency inverter	Power loss [W]	Rated current [A]	Leakage current [mA]	Weight [kg]	Art. no.
FFR-RS-7.5k-27A-EF100	FR-A741-5.5K–7.5K	12	27	6.8	6	227840
FFR-RS-15k-45A-EF100	FR-A741-11K–15K	25	45	6.8	8.5	227841
FFR-RS-22k-65A-EF100	FR-A741-18.5K–22K	37	65	12.2	13	227842
FFR-RS-45k-127A-EF100	FR-A741-30K–45K	64	127	15.9	18	227843
FFR-RS-55k-159A-EF100	FR-A741-55K	73	159	15.9	28	227844

The filters can provide conformity with following limits: C1 up to 20 m, C2 up to 100 m.

■ Noise Filters for FR-A770-355K/560K-79

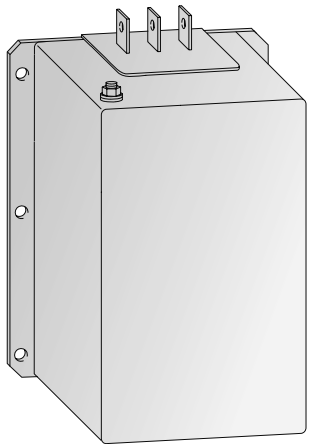

Filter	Frequency inverter	Power loss [W]	Rated current [A]	Leakage current [mA]	Weight [kg]	Art. no.
FFR-VBS-690V-600A-RB100	FR-A770-355K-79	66	600	10 (300 max.)	16	269407
FFR-VBS-690V-800A-RB100	FR-A770-560K-79	160	800	10 (300 max.)	16	269406

The filters can provide conformity with following limits: C2 up to 100 m, C4 up to100 m.

■ du/dt Filters for FR-D700 SC/E700 SC/F700/A700/A800

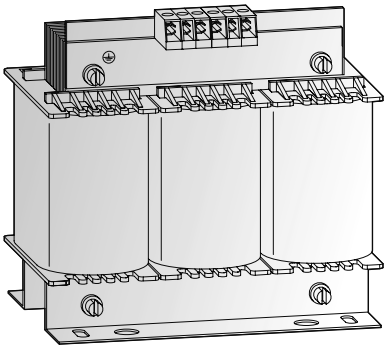

du/dt Filter

The du/dt output filter efficiently reduces the voltage rise time, motor heat generation, insulation stressing and motor noise generation.

du/dt Filter	Motor output power [kW] ①			Rated current [A]	Power loss [W]	Weight [kg]	Dimensions (WxHxD)	Art. no.
	400 V	230 V	200 V					
FFR-DT-10A-SS1	4	2.2	2.2	10	25	1.2	100x120x65	209755
FFR-DT-25A-SS1	11	5.5	5.5	25	45	2.5	125x140x80	209756
FFR-DT-47A-SS1	22	—	11	47	60	6.1	155x195x110	209757
FFR-DT-93A-SS1	45	—	22	93	75	7.4	190x240x100	209758
FFR-DT-124A-SS1	55	—	30	124	110	8.2	190x170x150	209759
FFR-DT-182A-SS1	90	—	75	182	140	16	210x185x160	209760
FFR-DT-330A-SS1	160	—	90	330	240	32	240x220x240	209761
FFR-DT-500A-SS1	250	—	—	500	340	35	240x325x220	209762
FFR-DT-610A-SS1	315	—	—	610	380	37	240x325x230	209763
FFR-DT-683A-SS1	400	—	—	683	410	38	240x325x230	209764
FFR-DT-790A-SS1	450	—	—	790	590	43	300x355x218	209765
FFR-DT-1100A-SS1	630	—	—	1100	760	66	360x380x250	209766
FFR-DT-1500A-SS1	800	—	—	1500	1045	97	360x485x265	209767

① Selection based on 4pole (50 Hz 1500 rpm) standard motor

■ Sinusoidal Filter for FR-D700 SC/E700 SC/F700/A700/A800

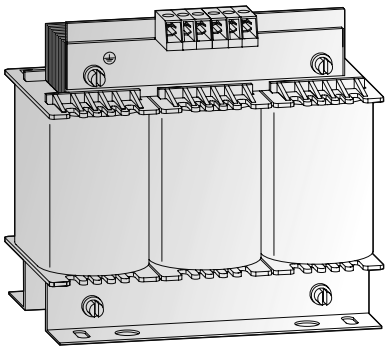

Sinusoidal Filter

The sinusoidal output filter ensures a sinusoidal output voltage with low voltage ripple. This makes it possible to use motors with lower insulation resistance and it also increases the maximum possible motorpower cable length.

It also reduces leakage current, motor heat and noise generation.

Filter	Motor output power [kW] ①			Rated current [A]	Power loss [W]	Weight [kg]	Dimensions (WxHxD) [mm]	Art. no.
	400 V	230 V	200 V					
FFR-SI-4.5A-SS1	1.5	0.75	0.75	4.5	45	3.1	125x180x75	209735
FFR-SI-8.3A-SS1	3.0	1.5	1.5	8.0	65	6.9	155x205x95	209736
FFR-SI-18A-SS1	7.5	4.0	4.0	18	118	12.4	190x210x130	209737
FFR-SI-25A-SS1	11	5.5	5.5	24	130	15.7	210x270x125	209738
FFR-SI-32A-SS1	15	7.5	7.5	32	140	16.1	210x270x135	209739
FFR-SI-48A-SS1	22	—	11	48	230	25	240x300x210	209740
FFR-SI-62A-SS1	30	—	15	62	270	27	240x300x220	209741
FFR-SI-77A-SS1	37	—	18.5	75	290	34.4	300x345x210	209742
FFR-SI-93A-SS1	45	—	22	90	360	37.2	300x345x215	209743
FFR-SI-116A-SS1	55	—	30	110	430	46.8	300x360x237	209744
FFR-SI-180A-SS1	90	—	45	180	870	72.4	420x510x235	209745
FFR-SI-260A-SS1	132	—	55	260	1300	123.4	420x550x295	209746
FFR-SI-432A-SS1	220	—	90	432	1580	162.8	510x650x320	209747
FFR-SI-481A-SS1	250	—	—	480	2170	196.8	510x750x340	209748
FFR-SI-683A-SS1	355	—	—	660	2650	218	600x880x390	209749
FFR-SI-770A-SS1	400	—	—	770	3900	410	600x990x430	209750
FFR-SI-880A-SS1	500	—	—	880	3970	570	600x1000x500	209751
FFR-SI-1212A-SS1	630	—	—	1212	5900	660	870x1050x420	209752
FFR-SI-1500A-SS1	800	—	—	1500	on request	on request	on request	209754

① Selection based on 2pole (1500 rpm) standard motor

■ External Heatsink Frame for FR-F700/A800

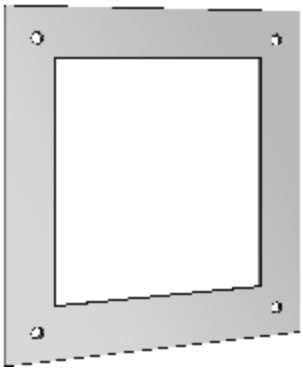

External Heatsink Frame

Frame for installing the inverter heatsink outside the switchgear cabinet (IP20).

Frame	Frequency inverter	Art. no.
FR-A7CN01	FR-A840/F740-00023–00126	189841
FR-A7CN02	FR-A840/F740-00170/00250	189842
FR-A7CN03	FR-A840/F740-00310/00380	189843
FR-A7CN04	FR-A840/F740-00470/00620	189844
FR-A7CN06	FR-A840/F740-00770	189846
FR-A7CN07	FR-A840/F740-00930/01160/01800	189847
FR-A7CN08	FR-A840/F740-02160	189848
FR-A7CN09	FR-A840/F740-02600	189849
FR-A7CN10	FR-A840/F740-03250/03610	189850

■ Floor Standing Unit FSU for FR-F700

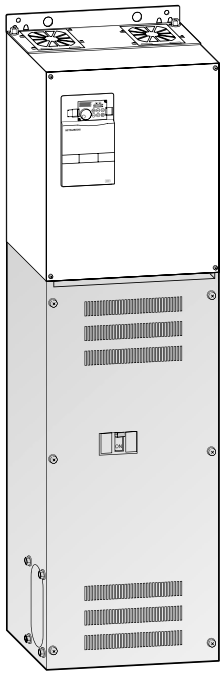

Floor standing unit

The floor standing unit FR-FSU enables fast and trouble-free installation of a frequency inverter and saves costs and space. The FR-FSU offers the opportunity to integrate a DC choke or the optional EMC filter FN3359. The floor standing unit also allows the connection of power cables with large diameters.

The unit is available in two different versions: type FR-FSU-□□□ with normal terminal blocks and type FR-FSU-□□□-RE... with integrated circuit breaker.

Floor standing unit	Frequency inverter	Circuit breaker	Dimensions (WxHxD) [mm]	Overall dimensions (WxHxD) [mm]	Art. no.
FR-FSU-01800	FR-F740-00930–01800		435x1100x240	435x1613x250	163994
FR-FSU-02600	FR-F740-02160–02600		465x1030x290	465x1613x300	163995
FR-FSU-03610	FR-F740-03250–03610		465x910x350	465x1613x360	163996
FR-FSU-04810	FR-F740-04320–04810	—	498x890x370	498x1870x380	163997
FR-FSU-06830	FR-F740-05470–06830		680x890x370	680x1870x380	163998
FR-FSU-08660	FR-F740-07700–08660		790x1107x430	790x2400x440	164783
FR-FSU-12120	FR-F740-096200–12120		995x757x430	995x2300x440	165759
FR-FSU-01800-RE250	FR-F740-01160–01800	NF250-SGW (125–250 A)	435x1100x240	435x1613x250	164791
FR-FSU-02600-RE250	FR-F740-02160	NF250-SGW (125–250 A)	465x1030x290	465x1613x300	164792
FR-FSU-02600-RE250	FR-F740-02600	NF400-SEP (200–400 A)	465x1030x290	465x1613x300	164792
FR-FSU-03610-RE400	FR-F740-03250–03610	NF400-SEP (200–400 A)	465x910x350	465x1613x360	164794
FR-FSU-04810-RE630	FR-F740-04320–04810	NF630-SEP (300–630 A)	498x890x370	498x1870x380	164795
FR-FSU-06830-RE630	FR-F740-05470	NF630-SEP (300–630 A)	680x890x370	680x1870x380	164796
FR-FSU-06830-RE800	FR-F740-06100–06830	NF800-SEP (400–800 A)	680x890x370	680x1870x380	164798
FR-FSU-08660-RE1000	FR-F740-07700–08660	NF1000-SS (500–1000 A)	790x1107x430	790x2400x440	164799

■ AC Chokes for FR-D700 SC/E700 SC/F700/A700/A800

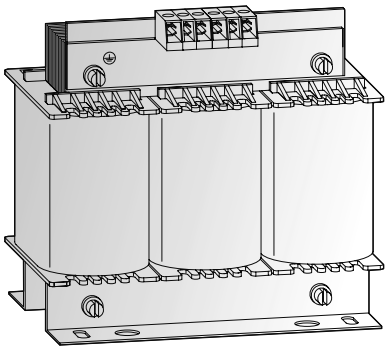

Mains supply chokes

The mains supply chokes compensate voltage fluctuations and simultaneously increase the efficiency. Applying the appropriate power choke an overall efficiency of up to 90 % can be achieved.

The use of a power choke is especially recommended for main circuits where high capacities are switched, for example via thyristors.

Choke		Motor output power [kW]	L [mH]	Current [A]	Power loss [W]	Weight [kg]	Art. no.
Single-phase	FR-BAL-S-B-0.2K	0.2	10	3	14	0.7	134968
	FR-BAL-S-B-0.4K	0.4	10	5.5	16	1.2	134969
	FR-BAL-S-B-0.75K	0.75	10	8	34	4.5	134970
Three-phase	FR-BAL-B-4.0K	4.0	2.340	12	31	3.0	87244
	FR-BAL-B-5.5K	5.0	1.750	16	44	3.7	87245
	FR-BAL-B-7.5K	7.5	1.220	23	59	5.5	87246
	FR-BAL-B-11K/-15K	11/15	0.667	42	68	10.7	71053
	FR-BAL-B-22K	22	0.483	58	77	11.2	87247
	FR-BAL-B-30K	30	0.369	76	86	11.6	87248
	FR-BAL-B-37K	37	0.295	95	113	18.6	87249
	FR-BAL-B-45K	45	0.244	115	118	21.4	71044
	FR-BAL-B-55K	55	0.191	147	120	22.6	87250

■ DC Chokes

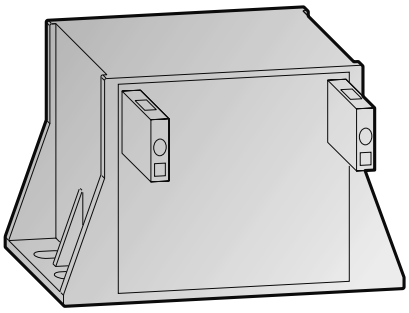

DC link chokes

The FFR-HEL DC chokes meets the requirements of the EN 61558 standard. The IP20 version is soaked and cast into a housing with resin.

By adding the optional DC choke to the inverter system, compliance to EN61000-3-12 can be reached.

Choke		Motor output power [kW]	Power loss [W]	Protection	Weight [kg]	Art. no.
200 V type	FFR-HEL-0.4K-E	0.4	9.8	IP20	0.6	238357
	FFR-HEL-0.75K-E	0.75	12.3	IP20	0.6	238358
	FFR-HEL-1.5K-E	1.5	19.1	IP20	1.2	238359
	FFR-HEL-2.2K-E	2.2	19.6	IP20	1.2	238360
	FFR-HEL-3.7K-E	3.7	19.8	IP20	1.5	238361
	FFR-HEL-5.5K-E	5.5	31.3	IP20	3.1	238362
	FFR-HEL-7.5K-E	7.5	30.4	IP20	3.1	238363
	FFR-HEL-11K-E	11	32.5	IP20	3.1	238364
	FFR-HEL-15K-E	15	32.5	IP20	4	238365
	FFR-HEL-18.5K-E	18.5	37.2	IP20	4	238366
	FFR-HEL-22K-E	22	44.1	IP20	5.5	238367
	FFR-HEL-30K-E	30	60.8	IP00	8.2	238368
	FFR-HEL-37K-E	37	58.8	IP00	10.7	238369
	FFR-HEL-45K-E	45	72.4	IP00	11.3	238370
	FFR-HEL-55K-E	55	65.5	IP00	14.4	238371
400 V type	FFR-HEL-H0.4K-E	0.4	8.8	IP20	0.35	238342
	FFR-HEL-H0.75K-E	0.75	9.4	IP20	0.6	238343
	FFR-HEL-H1.5K-E	1.5	15.2	IP20	0.61	238344
	FFR-HEL-H2.2K-E	2.2	17.8	IP20	1.2	238345
	FFR-HEL-H3.7K-E	3.7	19.4	IP20	1.2	238346
	FFR-HEL-H5.5K-E	5.5	19.5	IP20	1.5	238347
	FFR-HEL-H7.5K-E	7.5	25.4	IP20	2.2	238348
	FFR-HEL-H11K-E	11	24.9	IP20	3.1	238349
	FFR-HEL-H15K-E	15	33.5	IP20	3	238350
	FFR-HEL-H18.5K-E	18.5	34.6	IP20	4	238351
	FFR-HEL-H22K-E	22	40.5	IP20	5.3	238352
	FFR-HEL-H30K-E	30	48.7	IP20	5.75	238353
	FFR-HEL-H37K-E	37	44.3	IP20	8	238354
	FFR-HEL-H45K-E	45	64.6	IP00	11.3	238355
	FFR-HEL-H55K-E	55	72.6	IP00	14.4	238356

■ DC Chokes

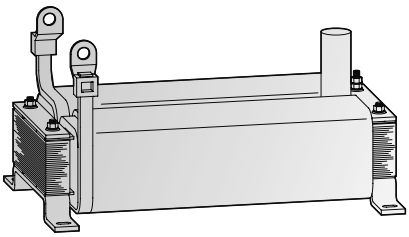

DC link chokes

In 700 series a DC choke is included as standard for inverter models FR-F740-01800 and above.

In 800 series a DC choke need to be ordered separately, based on the motor kW. This is mandatory from 75 kW and above.

Choke		Motor output power [kW]	Power loss [W]	Protection	Weight [kg]	Art. no.
200 V type	FR-HEL-75K	75	130	IP00	17	275836
	FR-HEL-90K	90	130	IP00	19	275837
	FR-HEL-110K	110	160	IP00	20	275838
400 V type	FR-HEL-H75K	75	130	IP00	16	273304
	FR-HEL-H90K	90	130	IP00	20	273305
	FR-HEL-H110K	110	140	IP00	22	273306
	FR-HEL-H132K	132	140	IP00	26	273307
	FR-HEL-H160K	160	170	IP00	28	273308
	FR-HEL-H185K	185	230	IP00	29	273309
	FR-HEL-H220K	220	240	IP00	30	273310
	FR-HEL-H250K	250	270	IP00	35	273311
	FR-HEL-H280K	280	300	IP00	38	273312
	FR-HEL-H315K	315	360	IP00	42	273313
	FR-HEL-H355K	355	360	IP00	46	273314

■ Parameter Units

FR-PU07-01

FR-DU07

FR-LU08

The parameter unit FR-PU07 provides a 10-key keypad for a direct entering of numerical values. A 4-row LC display returns operational data, parameter names or status and error messages in uncoded text.

The parameter unit displays text in the following selectable languages: English, German, French, Spanish, Swedish, Italian, Finnish, and Japanese.

In addition to the functions of the standard parameter unit the FR-PU07 displays and monitors 21 different values (like frequency, current, voltage, etc.) and states in total.

The parameter unit FR-PU07 is used instead of the standard control units FR-DU04 and FR-DU07 and can be replaced by this after use.

The parameter unit FR-PU07 conforms to the protection rating IP40.

Parameter unit	Frequency inverter	Description	Art. no.
FR-DU07	FR-D/E/A/F700	Interactive parameter unit with LC display	157514
FR-DU07-IP54	FR-D/E/A/F700	Interactive parameter unit with LC display	207067
FR-PU07	FR-D/E/A/F700	Interactive parameter unit with LC display	166134
FR-PU07-01	FR-F700	Interactive parameter unit like FR-PU07 but with additional AUTO/HAND keys and advanced PID monitor	242151
FR-PU07BB-L	FR-E700 SC/FR-A700	Interactive parameter unit with LC display and battery pack	209052
FR-PA07	FR-D700 SC/FR-E700 SC	Interactive parameter unit with LC display	214795
FR-LU08	FR-A800	Interactive parameter unit with LC display	274525

■ Brake Units BU-UFS

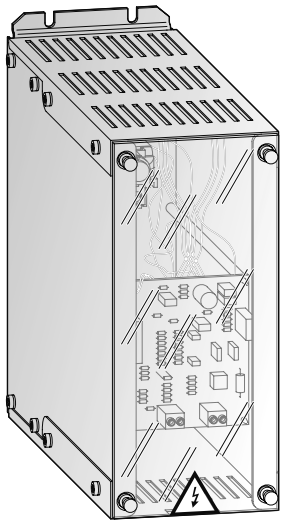

For a braking torque higher than 20 % or a duty cycle higher than 30 % an external brake unit including the adequate brake resistors has to be installed.

The brake units BU-UFS listed below are cascadeable so that the optimum size can always be achieved.

The brake units here are not fitted with brake resistors, which must be ordered separately (see below).

The configurations in the table are only general recommendations. Please consult Mitsubishi Electric for advice on matching the correct brake modules and brake resistors for your application.

Brake unit	Frequency inverter	Rated voltage [V]	Max. peak current [A]	Max. instantaneous power [kW]	Max. duty cycle [%]	Power loss [W]	Weight [kg]	Art. no.
BU-UFS22	FR-D740/FR-E740 SC FR-A/F740-00023–00250	400	34	25	10	37	2.5	127947
BU-UFS40	FR-A/F740-00250–00470	400	55	41	10	42	2.5	127948
BU-UFS110	FR-A/F740-00470–01160	400	140	105	5	48	3.9	127950

■ Brake Units FR-BU2

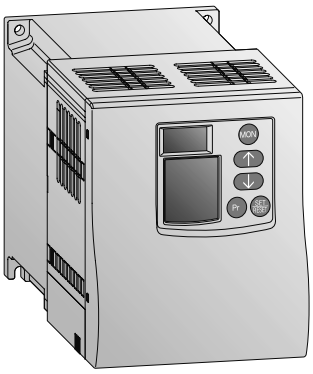

The brake unit FR-BU2 is used when a large brake torque is necessary such as when the motor is made to run by the load, quick deceleration is required, etc.

It is equipped with a control panel for monitoring different values, setting parameters and displaying the alarm history.

The brake units FR-BU2 listed below are cascadeable so that the optimum size can always be achieved.

The brake units here are not fitted with brake resistors, which must be ordered separately (brake resistors available soon).

Brake unit		Applicable motor capacity	Multiple (parallel) operation	Protective structure	Powerloss 0 % ED	10 % ED	50 % ED	100 % ED	Weight [kg]	Art. no.
200 V class	FR-BU2-1.5K	Capacity of the motor to be used with differs according to the braking torque and duty (% ED)	10 units maximum (Note that torque generated is not more than the tolerable overcurrent amount of connected inverter)	IP00	5	8	18	31	0.9	202420
	FR-BU2-3.7K				5	10	27	49	0.9	202421
	FR-BU2-7.5K				5	12	36	67	0.9	202422
	FR-BU2-15K				5	23	86	165	0.9	202423
	FR-BU2-30K				5	38	149	288	5	202424
	FR-BU2-55K				5	91	318	601	5	202425
400 V class	FR-BU2-H7.5K				5	10	27	47	5	202426
	FR-BU2-H15K				5	13	40	74	5	202427
	FR-BU2-H30K				5	20	72	137	5	202428
	FR-BU2-H55K				5	37	140	268	5	202429
	FR-BU2-H75K				5	49	174	331	5	202430

■ Brake Resistors for Brake Unit BU-UFS

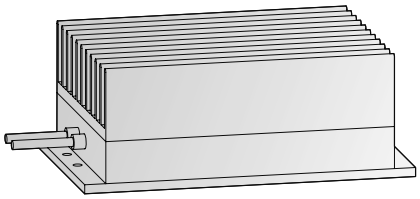

The brake resistors RUFC are designed for the exclusive use in combination with a brake unit BU-UFS.

Please note that the specifications for the allowed duty cycle (ED max.) included in the instruction manual for the brake unit.

Type	Application	Regenerative brake duty [%]	Resistance [Ω]	Capacity [W]	Art. no.
RUFC22	BU-UFS 22	10	1 x 24	2000	129629
RUFC40 (Set)	BU-UFS 40	10	2 x 6.8	2000	129630
RUFC110 (Set)	BU-UFS 110	10	4 x 6.8	2000	129631

■ External Brake Resistors FR-ABR-(H)□□K for FR-D700 SC/E700 SC/A800

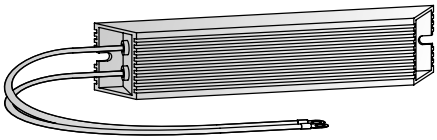

Among the capacity range of the FR-D720S-025–100/FR-D740 (all) and FR-E720S-030–110SC/FR-E740 SC (all) the inverter is equipped with an internal brake transistor as standard.

An improvement of the brake duty is achieved by the use of an external brake resistor with a higher rated capacity.

The duty cycle is selectable via parameter 30 and can be specified, according to the inverter, up to 10 % respectively 30 % via parameter 70.

Brake resistor	Frequency inverter	Regenerative brake duty	Resistor [Ω]	Art. no.
FR-ABR-0.4K	FR-D720S-025SC, FR-E720S-030SC, FR-A820-00046	10 % (ED)	200	46788
FR-ABR-0.75K	FR-D720S-042SC, FR-E720S-050SC, FR-A820-00077	10 % (ED)	100	46602
FR-ABR-2.2K	FR-D720S-070/100SC, FR-E720S-080/110SC, FR-A820-00167	10 % (ED)	60	46787
FR-ABR-3.7K	FR-A820-00240	10 % (ED)	40	46604
FR-ABR-5.5K	FR-A820-00340	10 % (ED)	25	48301
FR-ABR-7.5K	FR-A820-00490	10 % (ED)	20	50048
FR-ABR-11K	FR-A820-00630	10 % (ED)	13	191574
FR-ABR-15K	FR-A820-00770	10 % (ED)	18	191575
FR-ABR-22K	FR-A820-01250	10 % (ED)	13	191576
FR-ABR-H 0.4K	FR-D740-012SC, FR-E740-016SC, FR-A840-00023	10 % (ED)	1200	46601
FR-ABR-H 0.75K	FR-D740-022SC, FR-E740-026SC, FR-A840-00038	10 % (ED)	700	46411
FR-ABR-H 1.5K	FR-D740-036SC, FR-E740-040SC, FR-A840-00052	10 % (ED)	350	46603
FR-ABR-H 2.2K	FR-D740-050SC, FR-E740-060SC, FR-A840-00083	10 % (ED)	250	46412
FR-ABR-H 3.7K	FR-D740-080SC, FR-E740-095SC, FR-A840-00126	10 % (ED)	150	46413
FR-ABR-H 5.5K	FR-D740-120SC, FR-E740-120SC, FR-A840-00170	10 % (ED)	110	50045
FR-ABR-H 7.5K	FR-D740-160SC, FR-E740-170SC, FR-A840-00250	10 % (ED)	75	50049
FR-ABR-H 11K	FR-E740-230SC, FR-A840-00310	6 % (ED)	52	191577
FR-ABR-H 15K	FR-E740-300SC, FR-A840-00380	6 % (ED)	2x18 serial	191578
FR-ABR-H 22K	FR-A840-00620	6 % (ED)	2x52 parallel	191579

■ Harmonic Converter FR-HC2

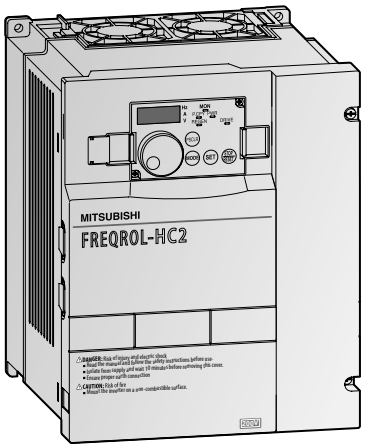

During braking operation the kinetic energy of the mechanical system is supplied back to the inverter. This energy normaly remains unused and manifests as heat, e. g. by a brake resistor. The harmonic converter FR-HC2 supplies this generated energy back to mains. Alternatively the frequency inverters can be supplied by this energy. One converter is able to supply up to 10 frequency inverters in parallel. The harmonic converter is also equipped with a powerful filter for reducing mains disturbances by suppressing the power supply harmonics.

- Effective suppression of harmonics with a THDi <4 % (THDi = Total Harmonic Distortion of Current)
- Energy saving by supplying energy back
- Parallel operation of 10 Frequency inverters with one unit (DC bus)
- Compact dimensions
- Longlife components and monitoring of operation time
- Easy to operate with digital dial
- Network communication

Output range:

7.5–560 kW,
200–220 V AC (50 Hz)/200–230 V AC (60 Hz)/
380–460 V AC (50/60 Hz)

Technical Details FR-HC2

Product line		200 V type FR-HC2-□K					400 V type FR-HC2-H□K ①										
		7.5	15	30	55	75	7.5	15	30	55	75	110	160	220	280	400	560
Applicable inverter capacity	kW	7.5	15	30	55	75	7.5	15	30	55	75	110	160	220	280	400	560
Rated output capacity ③	kW	10.7	19.8	38	71	92	11	20.2	37	73	92	135	192	264	336	476	660
Rated input voltage		3-phase 200–220 V, 50 Hz/200–230 V, 60 Hz ②					3-phase 380–460 V, 50/60 Hz ②										
Rated input current	A	33	61	115	215	278	17	31	57	110	139	203	290	397	506	716	993
Overload capacity ④		150 % of rated motor capacity for 60 s															
Permissible power supply voltage fluctuation		170–242 V, 50 Hz 170–253 V, 60 Hz				170–230 V 50/60 Hz	323–506 V, 50/60 Hz				323–460 V, 50/60 Hz						
Permissible power supply frequency fluctuation		±5 %															
Input power factor		0.99 or more (when load ratio is 100 %)															
Power supply capacity	kVA	14	25	47	88	110	14	26	47	90	113	165	235	322	410	580	804
Protective structure ⑤		Enclosed type (IP20) ⑥		Open type (IP00)			Enclosed type (IP20) ⑥		Open type (IP00)								
Cooling		Fan cooling															
Order Information	Art.no	270271	270272	270273	270274	270285	270286	270287	270288	270289	270290	270291	270292	270293	270294	270295	270296

Remarks:
① Model name of the 400 V class ends with H.
② The permissible voltage imbalance ratio is 3 % or less. (Imbalance ratio = (highest voltage between lines – average voltage between three lines)/average voltage between three lines x 100).
③ DC output capacity when the input voltage is 200 V AC (400 V for the 400 V class).
④ The % value of the overload current rating indicates the ratio of the overload current to the converter's rated input current. For repeated duty, allow time for the converter and the inverter to return to or below the temperatures under 100 % load.
⑤ The protective structure is IP40 for FR-DU07-CNV (except the PU connector) and IP00 for the outside box (220 K or lower) and the choke regardless of their capacities.
⑥ When the hook of the converter front cover is cut off for installation of the plug-in option, the protective structure changes to the open type (IP00).

Common Specifications FR-HC2

FR-HC2			Description
Control specifications	Modulation control		PWM
	Frequency range		50–60 Hz
	Stall prevention operation level		Current limit value selectable (0–220 % variable)
Control signals for operation	Input signals (5 terminals)		The following signals can be assigned to Pr. 3 to Pr. 7 (Input terminal function assignment): converter stop, monitor switching, converter reset, external thermal relay, and inrush resistance overheat detection.
	Output signals open-collector outputs (5 outputs) Relay output (1 output)	Operating status	The following signals can be assigned to Pr. 11 to Pr. 16 (Output terminal function assignment): inverter run enable signal, converter reset, converter running, overload alarm, power supply phase detection, output voltage match, instantaneous power failure detection, regenerative drive recognition, electronic thermal relay pre-alarm, fan alarm, heatsink overheat pre-alarm, during retry, input current detection, zero current detection, life alarm, maintenance timer, instantaneous power failure detection hold, alarm, and fault output.
		For meter Pulse train output (Max. 2.4 kHz: 1 terminal) Analog output Max. 10 V DC: 1 terminal	
Display	Parameter unit display (FR-DU07-CNV/ FR-PU07)	Operating status	Power supply frequency, input current, input voltage, fault or alarm indication, converter output voltage, electronic thermal relay load factor, cumulative energization time, cumulative power, input power, input power (with regenerative display), I/O terminal status ①, power/regenerative drive indication, option fitting state ②
		Alarm definition	Alarm definition is displayed when the protective function is activated Past eight fault records and the data right before the fault (input voltage/current/bus voltage/cumulative energization) are stored.
		Interactive guidance	Operation guide/trouble shooting with a help function ②
Protection		Protective functions	Overcurrent, overvoltage, converter protection thermal, fin overheat, instantaneous power failure, undervoltage, input phase loss, HC2 dedicated board disconnection, input power supply fault, external thermal relay operation ④, parameter error, PU disconnection ④, retry count excess ④, converter CPU fault, operation panel power supply short circuit, 24 V DC power output short circuit, input current detection value exceeded ④, inrush current limit circuit fault, internal circuit fault, option fault ⑤, communication option fault ⑤
		Warnings	Fan alarm, overload signal detection, electronic thermal relay function pre-alarm, PU stop, maintenance timer alarm 4, parameter write error, copy operation error, operation panel lock, parameter copy alarm, no-phase detection
Environment	Ambient temperature		-10–+50 °C (non-freezing)
	Ambient humidity		max. 90 % (non-condensing)
	Storage temperature ③		-20–+65 °C
	Ambient conditions		For indoor use only (without corrosive gas, flammable gas, oil mist, dust and dirt etc.)
	Altitude/Vibration resistance		Maximum 1000m above sea level. 5.9 m/s² ⑥ or less f at 10 to 55 Hz (directions of X, Y, Z axes)

Remarks:
① Can be displayed only on the operation panel (FR-DU07-CNV).
② Can be displayed only on the option parameter unit (FR-PU07).
③ Temperature applicable for a short time, e.g. in transit.
④ This protective function does not function in the initial status.
⑤ This protective function is only availible with option FR-A7NC mounted.
⑥ 2.9 m/s² or less for capacity class of 160 K or higher

Provided Peripheral Devices

Peripheral device model name	Description	Designation	Number
FR-HC2-7.5K–75K	Filter choke 1	FR-HCL21-(H)☐K	1
	Filter choke 2	FR-HCL22-(H)☐K	1
FR-HC2-H7.5K–H220K	Outside box	FR-HCB2-(H)☐K	1

Peripheral device model name	Designation	Model name of consisting parts			Number 280K	400K	560K
FR-HC2-H280–H560K	Filter choke 1	FR-HCL21-(H)☐K	—		1	1	1
	Filter choke 2	FR-HCL22-(H)☐K	—		1	1	1
	Filter capacitor	FR-HCC2-(H)☐K	Filter capacitor	FR-HCC2-(H)☐K	1	2	3
			Filter capacitor alarm detector	MDA-1	—	2	3
	Inrush current limit resistor	FR-HCR2-(H)☐K	Inrush current limit resistor (without thermostat)	0.96OHM BKO-CA1996H21	8	15	15
			Inrush current limit resistor (with thermostat)	0.96OHM BKO-CA1996H31	1	3	3
	Voltage converter	FR-HCM2-(H)☐K	MC power supply stepdown transformer (400–200 V)	1PH 630VA BKO-CA2001H06	1	1	1
			Inrush current limit MC	S-N400FXYS AC200V 2A2B	—	3	3
				S-N600FXYS AC210V 2A2B	1	—	—
			Buffer relay	SR-N4FX AC210V 4A	1	2	2
			Terminal block	TS-807BXC-5P	6	—	—
			Mini relay for filter capacitor alarm detector	MYQ4Z AC200/220	—	1	1
			Mini relay terminal block	PYF14T	—	1	1
			Mini relay clip	PYC-A1	—	2	2

Compatible Inverter for the Harmonic Converter

Up to ten frequency inverters can be connected to one FR-HC2. The capacity of the FR-HC2 is determined in that way, that it is equal or higher as the cumulative capacity of all connected inverters.

For maximum harmonic suppression the cumulative capacity of all connected inverters should be the half rated capacity of the FR-HC2.

Harmonic Converter		Compatible frequency inverters by means of capacity class	
		Compatible	Restricted compatible *
200 V	FR-HC2-7.5K	3.7–7.5 kW	<3.7 kW
	FR-HC2-15K	7.5–15 kW	<7.5 kW
	FR-HC2-30K	15–30 kW	<15 kW
	FR-HC2-55K	30–55 kW	<30 kW
	FR-HC2-75K	37–75 kW	<37 kW
200 V	FR-HC2-H7.5K	3.7–7.5 kW	<3.7 kW
	FR-HC2-H15K	7.5–15 kW	<7.5 kW
	FR-HC2-H30K	15–30 kW	<15 kW
	FR-HC2-H55K	30–55 kW	<30 kW
	FR-HC2-H75K	37–75 kW	<37 kW
	FR-HC2-H110K	55–110 kW	<55 kW
	FR-HC2-H160K	90–160 kW	<90 kW
	FR-HC2-H220K	110–220 kW	<110 kW
	FR-HC2-H280K	160–280 kW	<160 kW
	FR-HC2-H400K	200–400 kW	<200 kW
	FR-HC2-H560K	280–560 kW	<280 kW

* The converter can be used as a common converter or a regenerative converter, but its harmonic suppression effect reduces.

■ Profibus-Gateway

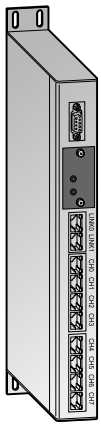

PBDP-GW-G8

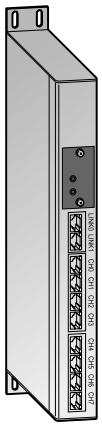

PBDP-GW-E8

The gateway PBDP allows the operation of up to 32 frequency inverters of the type FR-D700 through a Profibus address. In doing so, the gateway acts as a configurable PBDP Profibus slave.

The specifics of different master variants (Mitsubishi Electric/Siemens) will be considered by corresponding GSD files. Multi-processor technology ensures a synchronous distribution of messages within a few milliseconds.

Type	Item	Performance characteristics	Dimensions (WxHxD) [mm]	Art. no.
Base Unit	PBDP-GW-G8	Field bus connection ● Profibus slave conf. IEC 61158 ● Potential isolation automatic baud rate detection up to 12 Mbit/s ● 9 pole D-Sub socket Pin assignment conf. EN50170 Vol. 2 ● Distributes user data to up to 32 FR-D700 frequency inverters via a Profibus address ● Update rate: ~23 ms for 32 inverters (at a baud rate of 12 Mbit/s on the Profibus) ● Synchronicity: 1: <0.1 ms between the inverters of a device (CH0.CH7) ● Synchronicity: 2: <0.2 ms of all channels Inverter channels (CH0 .. CH7) ● 8 x RS422 interfaces for inverter connection ● 38400 baud ● Potential isolation ● RJ45 plug-in system	36x320x115	224915
Extension unit	PBDP-GW-E8			224916

■ Software FR Configurator

The Setup Software FR Configurator is a powerful tool for the operation of your frequency inverter.

The software runs under all versions of MS Windows and therefore allows the inverter operation via any conventional personal computer. Several frequency inverters can be set up, operated, and monitored simultaneously across a network or via a personal computer or laptop.

The Software FR Configurator is designed for all frequency inverters of the 700 series.

The FR Configurator2 is designed for 800 series, starting with FR-A800, but will include connection to 500/700 series in the future.

The connection between personal computer and inverter is established either via an RS485 network or directly via an SC-FR PC adapter cable available separately. For the FR-E700 SC/ FR-A700 series a USB-connector is also available.

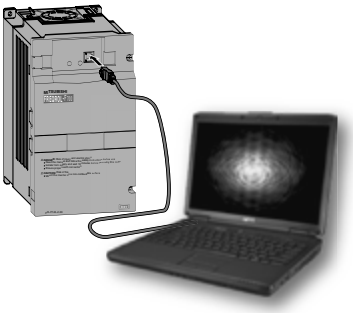

Benefits

- System settings
  Due to the network capabilities of the inverter up to 32 frequency inverters can be operated simultaneously.
- Parameter settings
  By means of overall and function related overviews different parameters can be adjusted easily.
- Display functions
  The comprehensible display functions enable data, analog, oscillograph, and alarm displays.
- Diagnostics
  The analysis of the inverter status provides a thorough error correction.
- Test operation
  The test operation provides a simulation of the operation and adjustment via the autotuning function.
- File management
  Parameters can be saved on the personal computer and printed out.
- Help
  The extensive online help provides support concerning all questions regarding settings and operation.

Parameter setting

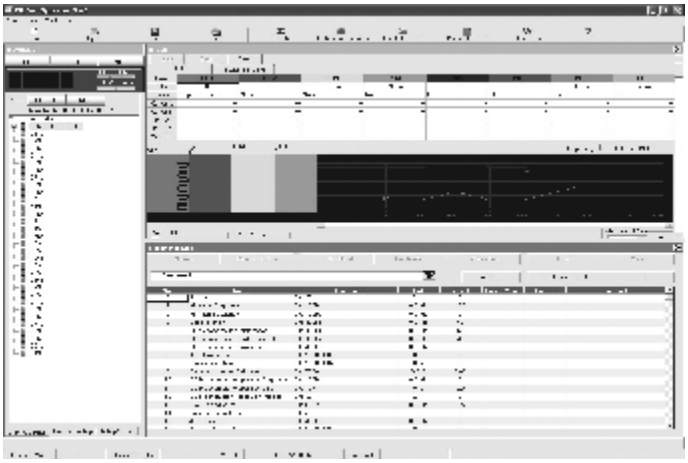

Display and monitor

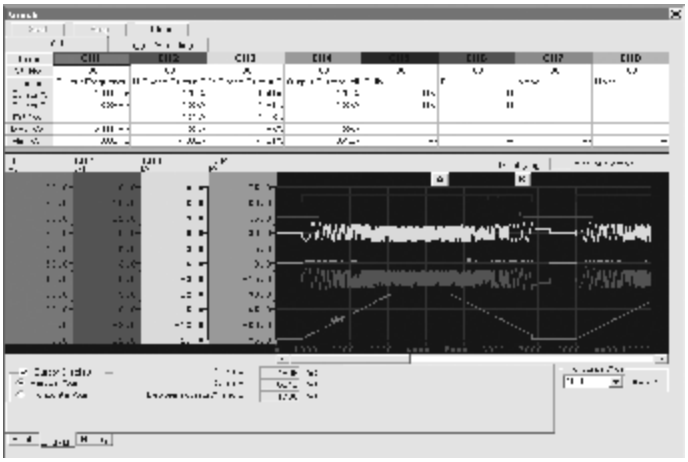

Test operation

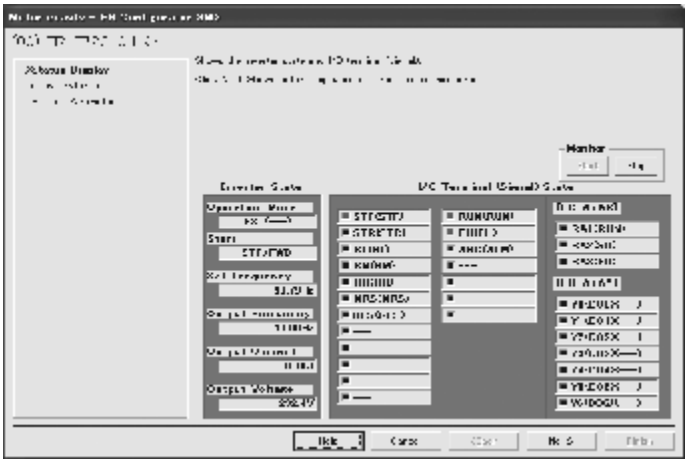

■ Parameter Units FR-PA07 and FR-DU07/FR-DU07-IP54

FR-PA07

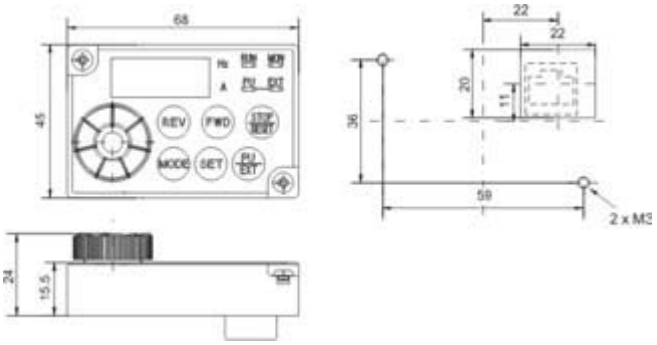

FR-DU07

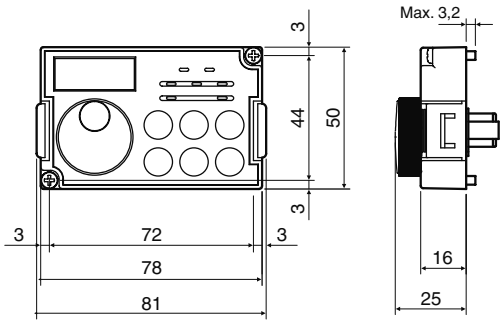

All dimensions in mm

■ Parameter Unit FR-PU07/FR-PU07BB-L

FR-PU07

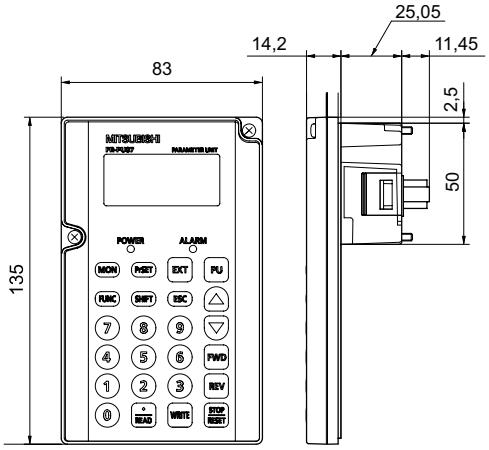

Panel cutting drawing

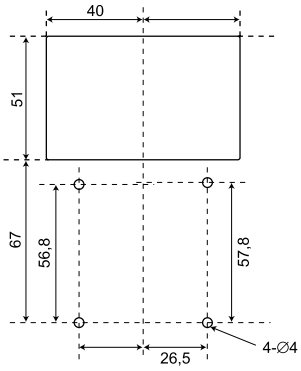

FR-PU07BB-L

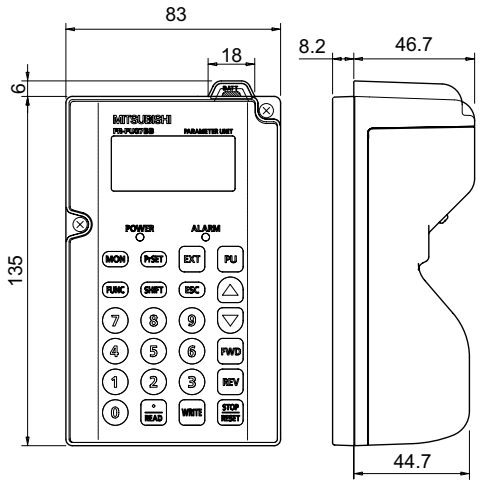

All dimensions in mm

■ Parameter Unit FR-LU08/FR-DU08

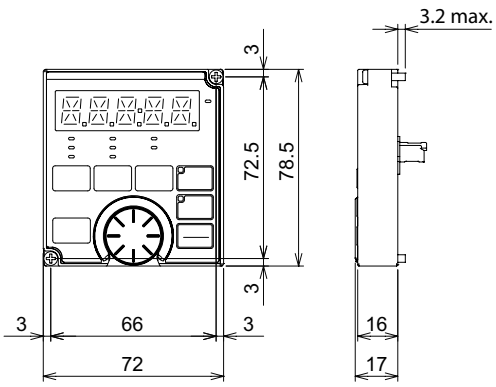

Panel cutting drawing

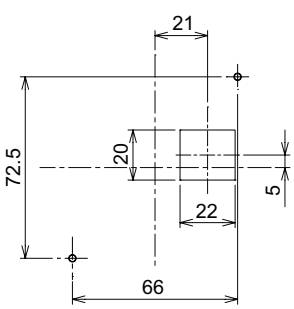

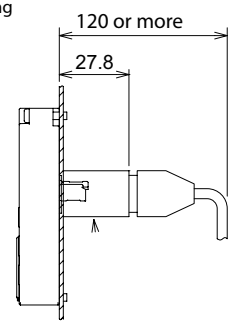

All dimensions in mm

■ FR-D720S-008–042SC

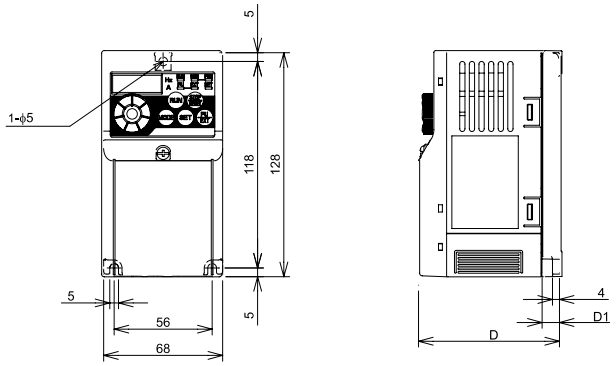

Type	D	D1
FR-D720S-008–014SC	80.5	10
FR-D720S-025SC	142.5	42
FR-D720S-042SC	162.5	62

All dimensions in mm

■ FR-D720S-070SC/FR-D740-012–080SC

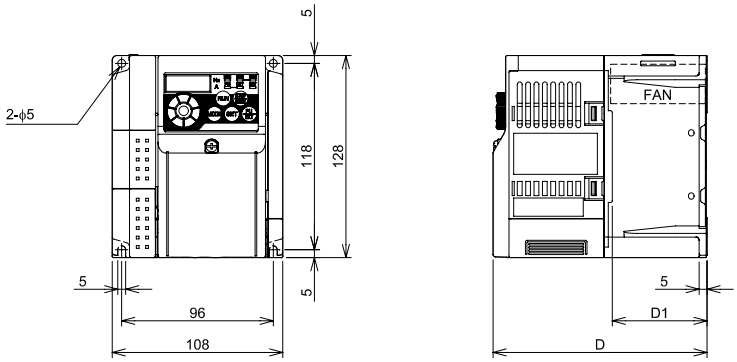

Type	D	D1
FR-D720S-070SC	155.5	60
FR-D740-012/022SC	129.5	54
FR-D740-036SC	135.5	60
FR-D740-050SC	155.5	
FR-D740-080SC	165.5	

All dimensions in mm

■ FR-D720S-100SC

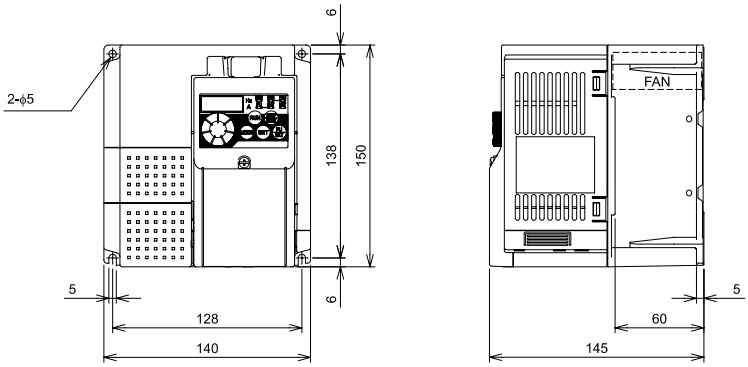

All dimensions in mm

■ FR-D740-120/160SC

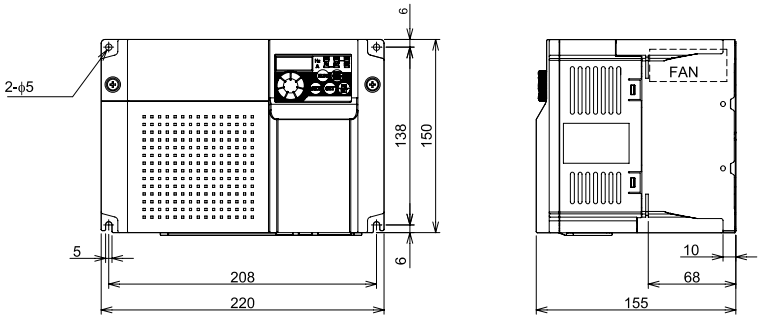

All dimensions in mm

■ FR-E720S-008–030SC

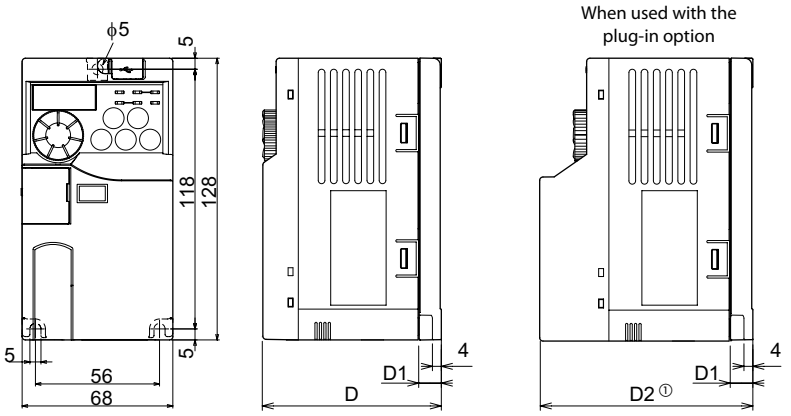

Type	D	D1	D2
FR-E720S-008/015SC	86.5	10	108.1
FR-E720S-030SC	148.5	42	170.1

All dimensions in mm

① When the FR-A7NC-E kit-SC-E is mounted, a terminal block protrudes making the depth approx. 2 mm greater.

■ FR-E720S-050/080SC

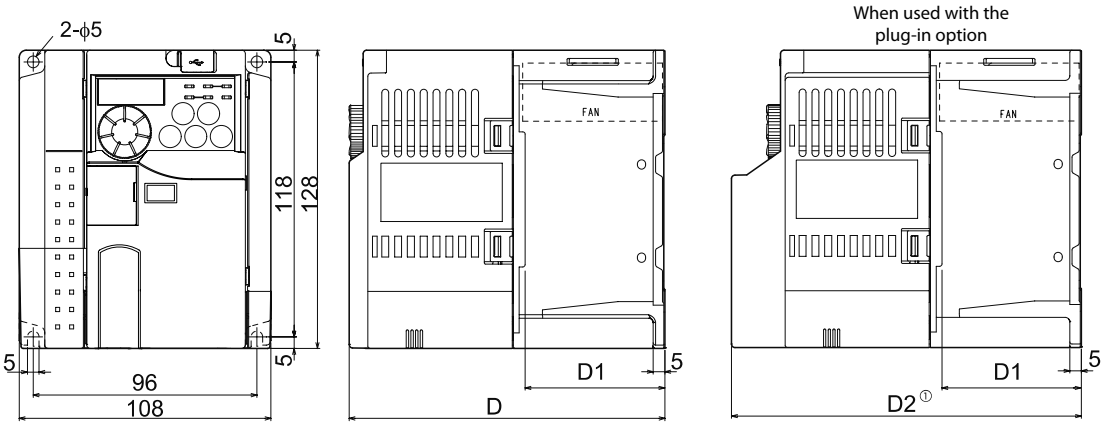

All dimensions in mm

① When the FR-A7NC-E kit-SC-E is mounted, a terminal block protrudes making the depth approx. 2 mm greater.

Type	D	D1	D2
FR-E720S-050SC	141.5	60	163.1
FR-E720S-080SC	167	60	188.6

■ FR-E720S-110SC/FR-E740-016–095SC

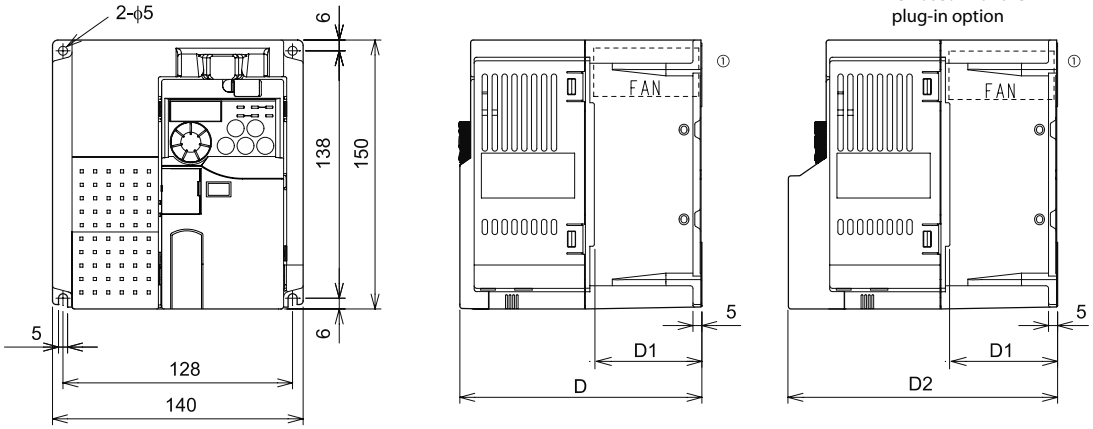

All dimensions in mm

① FR-E740-016SC and -026SC are not provided with the cooling fan.

① When the FR-A7NC-E kit-SC-E is mounted, a terminal block protrudes making the depth approx. 2 mm greater.

Type	D	D1	D2
FR-E720S-110SC	161.5	60	183.1
FR-E740-016/026SC	120	39	141.6
FR-E740-040–095SC	141	60	162.6

■ FR-E740-120/170SC

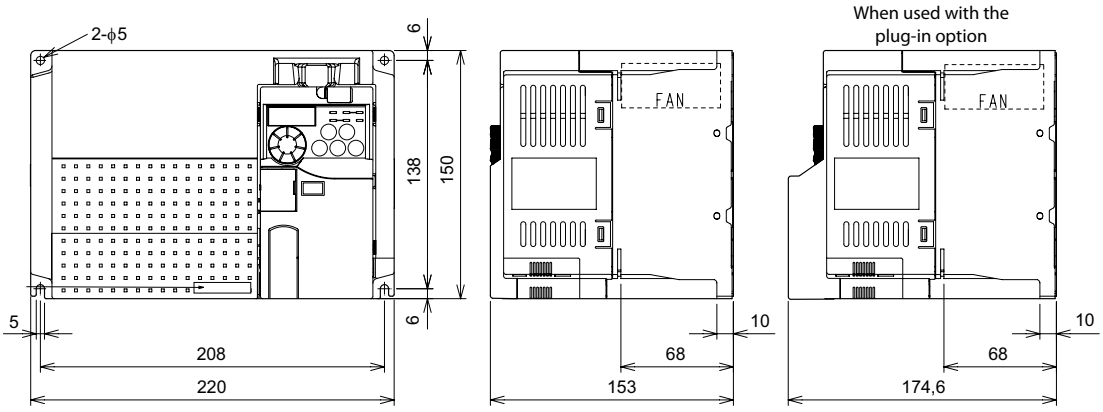

All dimensions in mm

① When the FR-A7NC-E kit-SC-E is mounted, a terminal block protrudes making the depth approx. 2 mm vergrößert.

■ FR-E740-230/300SC

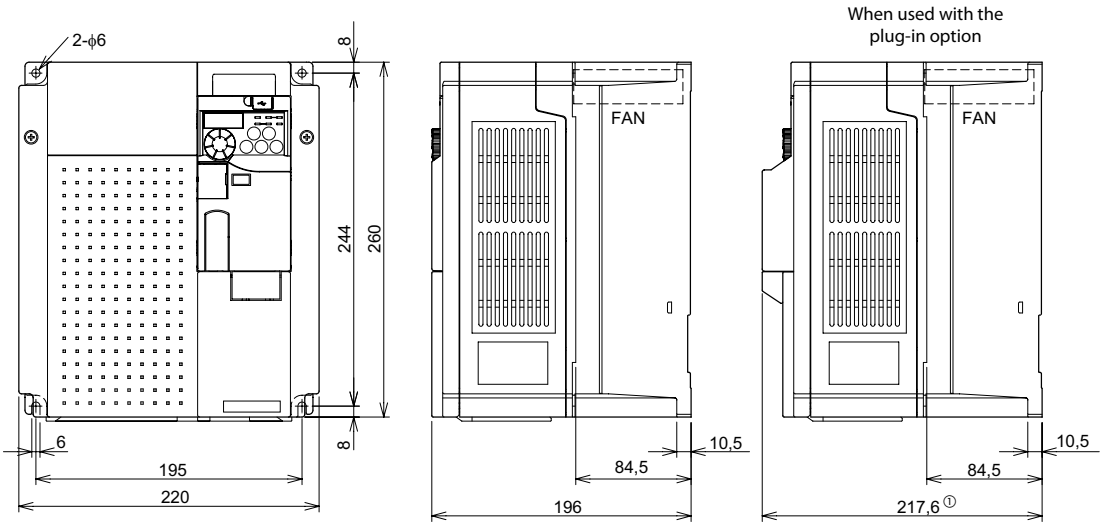

All dimensions in mm

① When the FR-A7NC-E kit-SC-E is mounted, a terminal block protrudes making the depth approx. 2 mm greater.

■ FR-F740/FR-F746

Case type A

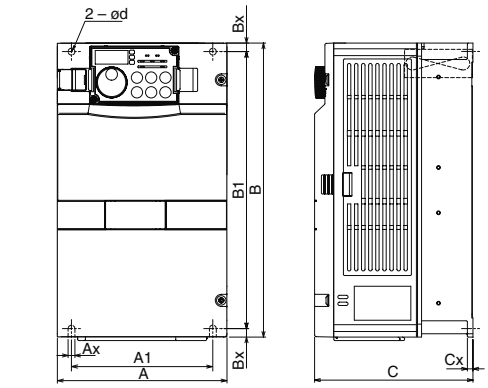

Case type B

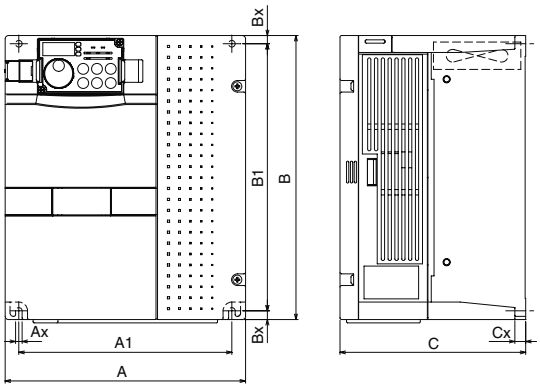

Case type C

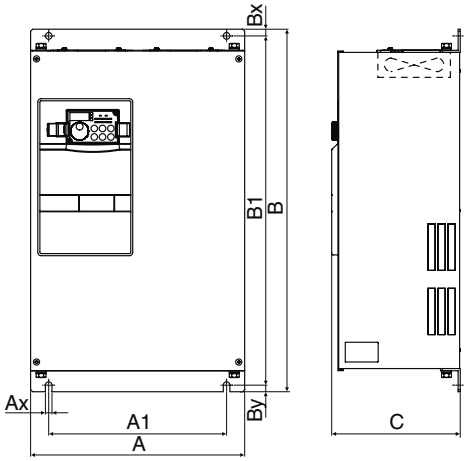

Case type D

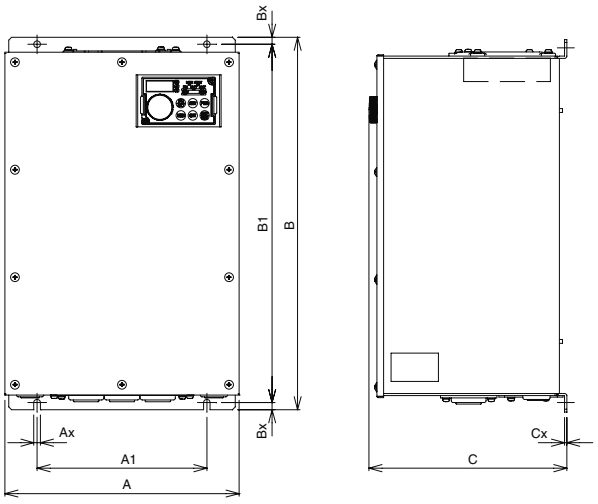

Type	A	A1	Ax	B	B1	Bx	C	Cx	d	Case type
FR-F740-00023–00126	150	125	6	260	245	7.5	140	5	6	A
FR-F740-00170/00250	220	195	6	260	245	7.5	170	10	8	B
FR-F740-00310/00380	220	195	6	300	285	7.5	190	10	8	B
FR-F740-00470/00620	250	230	10	400	380	10	190	10	10	B
FR-F740-00770	325	270	10	550	530	10	195	3.2	10	C
FR-F740-00930/01160	435	380	12	550	525	15	250	3.2	12	C
FR-F740-01800	435	380	12	550	525	15	250	3.2	12	C
FR-F740-02160/02600	465	400	12	620	595	15	300	3.2	12	C
FR-F740-03250/03610	465	400	12	740	715	15	360	3.2	12	C
FR-F740-04320/04810	498	400	49	1010	984	13	380	3.2	12	C
FR-F740-05470–06830	680	600	40	1010	984	13	380	3.2	12	C
FR-F740-07700/08660	790	635	80	1330	1300	15	440	3.2	12	C
FR-F740-09620–12120	995	900	47.5	1580	1550	15	440	3.2	12	C
FR-F746-00023–00126	249	180	7	395	380	7.5	210	2.3		D
FR-F746-00170/00250	319	255	7	395	380	7.5	240	2.3		D
FR-F746-00310/00380	319	258	10	445	425	10	260	2.3		D
FR-F746-00470/00620	354	312	10	560	540	10	260	2.3		D
FR-F746-00770	360	300	10	590	570	10	265	3.2		D
FR-F746-00930/01160	471	411	12	660	635	15	320	3.2		D

Please consider also the dimensions of the corresponding DC chokes (see page 78)

All dimensions in mm

■ FR-A741

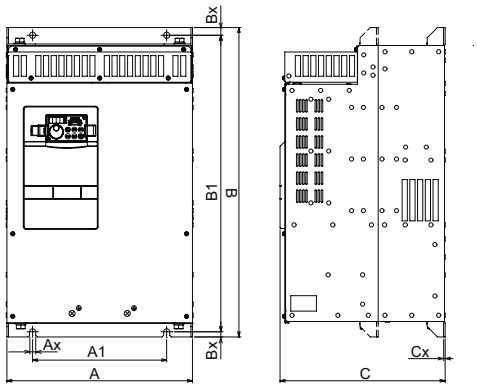

Type	A	A1	Ax	B	B1	Bx	C	Cx	d
FR-A741-5.5K/7.5K	250	190	10	470	454	8	270	2.3	10
FR-A741-11K/15K	300	220	10	600	575	15	294	3.2	10
FR-A741-18.5K/22K	360	260	12	600	575	15	320	3.2	12
FR-A741-30K	450	350	12	700	675	15	340	3.2	12
FR-A741-37K/45K	470	370	14	700	670	15	368	3.2	14

Please consider also the dimensions of the corresponding DC chokes (see page 78))

All dimensions in mm

■ FR-A770

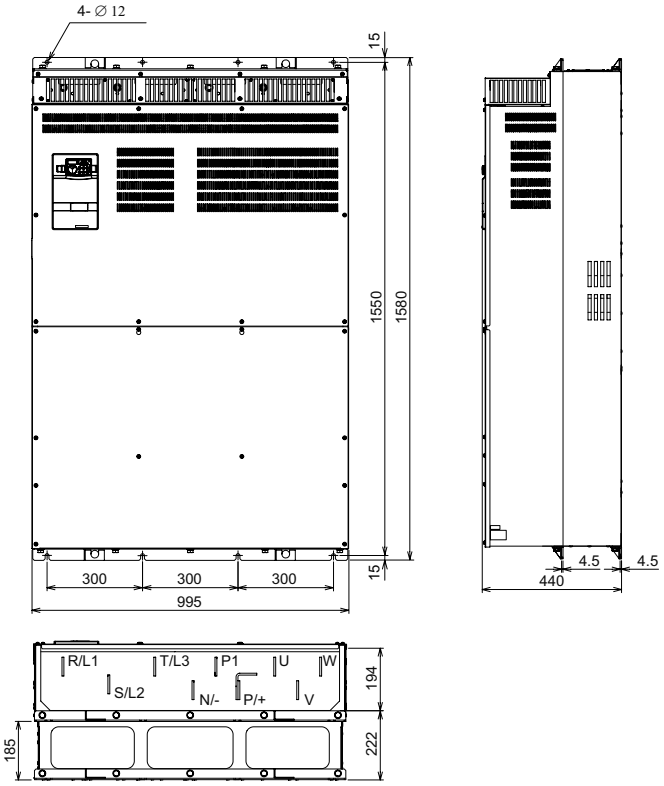

Type	W	H	D
FR-A770-355K/560K-79	995	1580	440

All dimensions in mm

■ FR-A800 (FR-A820/FR-A840)

FR-A820-00046, FR-A820-00077

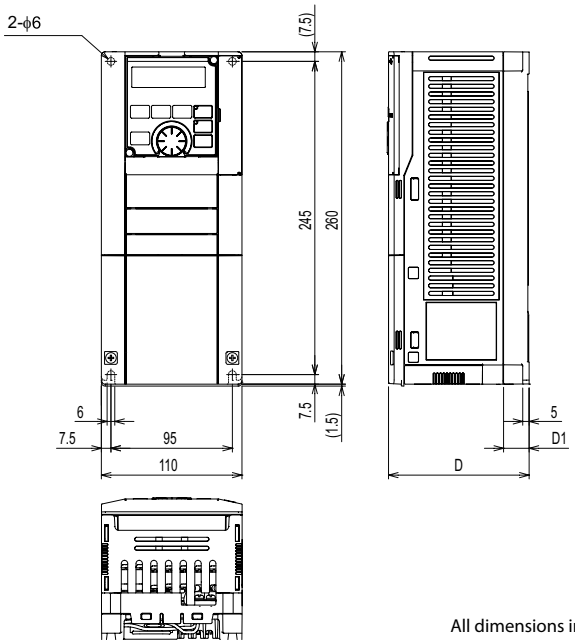

All dimensions in mm

Type	D	D1
FR-A820-00046	110	20
FR-A820-00077	125	35

FR-A820-00105, FR-A820-00167, FR-A820-00250,
FR-A840-00023, FR-A840-00038, FR-A840-00052,
FR-A840-00083, FR-A840-00126

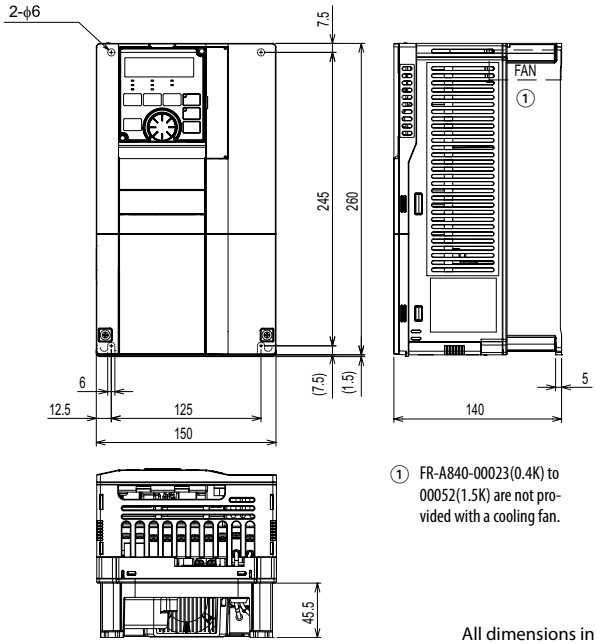

① FR-A840-00023(0.4K) to 00052(1.5K) are not provided with a cooling fan.

All dimensions in mm

FR-A820-00340, FR-A820-00490, FR-A820-00630,
FR-A840-00170, FR-A840-00250, FR-A840-00310, FR-A840-00380

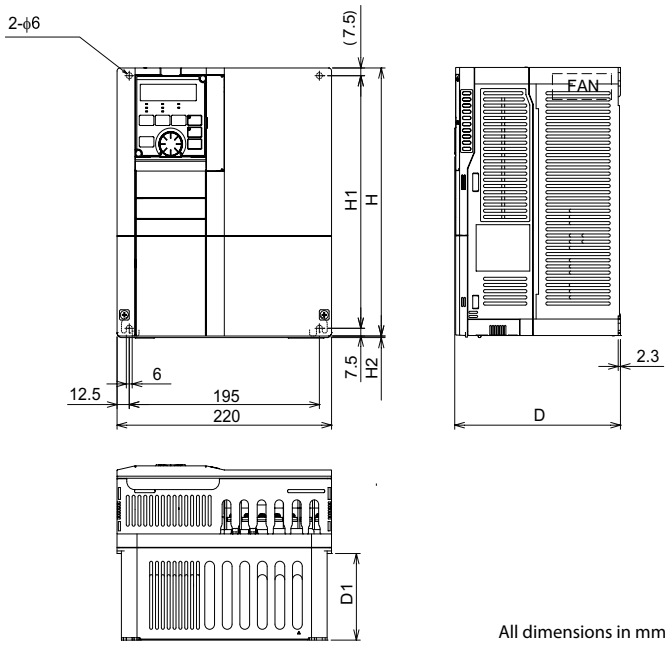

All dimensions in mm

Type	D	D1	H	H1	H2
FR-A820-00340, FR-A820-00490, FR-A840-00170, FR-A840-00250	170	84	260	145	1.5
FR-A820-00630, FR-A840-00310, FR-A840-00380	190	101.5	300	285	3

FR-A820-00770, FR-A820-00930, FR-A820-01250;
FR-A840-00470, FR-A840-00620

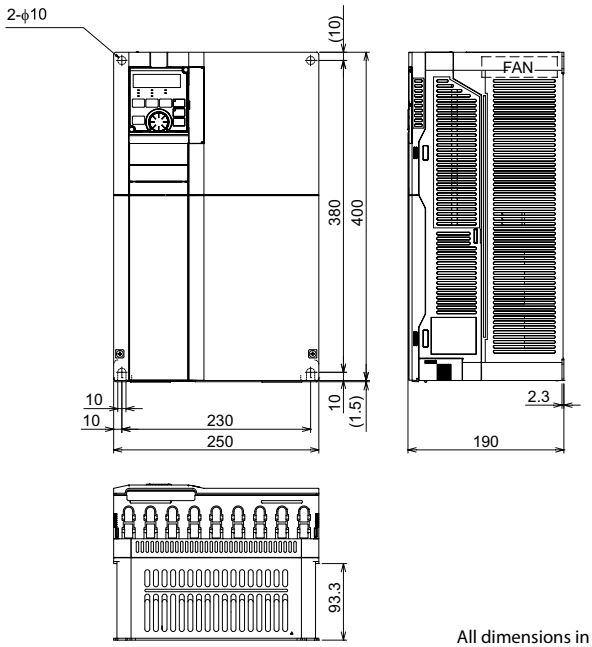

All dimensions in mm

FR-A820-01540, FR-A820-01870, FR-A820-02330, FR-A820-03160, FR-A820-03800, FR-A820-04750
FR-A840-00770, FR-A840-00930, FR-A840-01160, FR-A840-01800, FR-A840-02160, FR-A840-02600

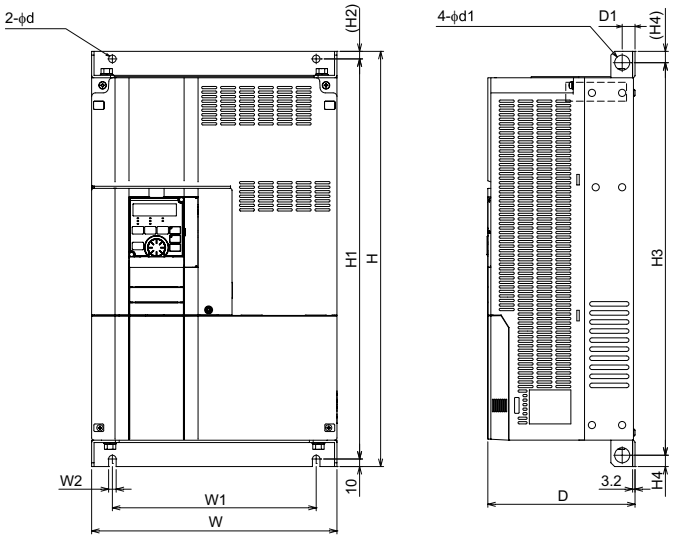

Type	d	d1	D	D1	H	H1	H2	H3	H4	W	W1	W2
FR-A820-01540, FR-A840-00770	10	20	195	17	550	530	10	520	15	325	270	10
FR-A820-01870, FR-A820 02330 FR-A840-00930, FR-A840-01160, FR-A840-01800	12	25	250	24	550	525	15	514	18	435	380	12
FR-A820-03160	12	25	250	22	700	675	15	664	18	465	410	12
FR-A820-03800, FR-A820-04750	12	24	360	22	740	715	15	704	18	465	400	12
FR-A840-02160, FR-A840-02600	12	24	300	22	620	595	15	584	18	465	400	12

FR-A840-03250, FR-A840-03610

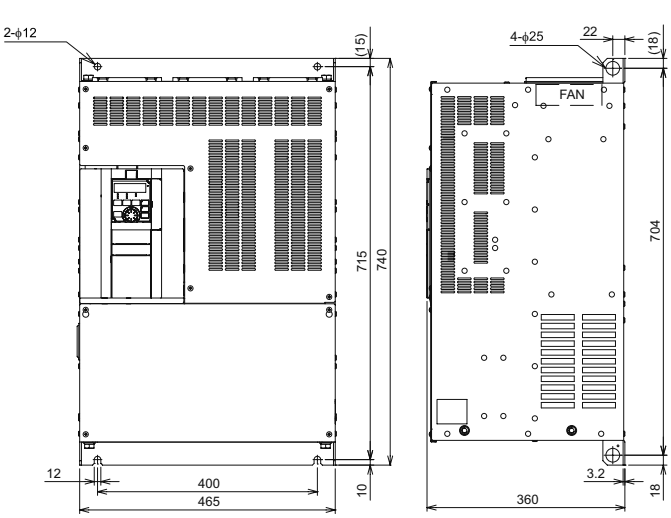

All dimensions in mm

FR-A840-04320, FR-A840-04810

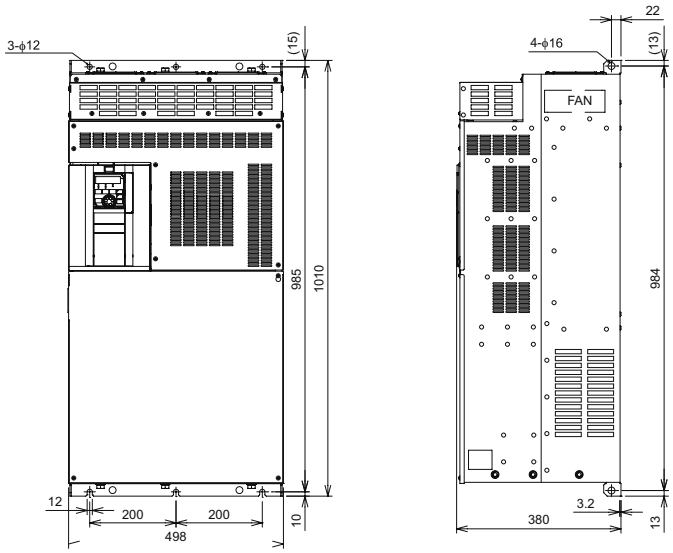

FR-A840-05470, FR-A840-06100, FR-A840-06830

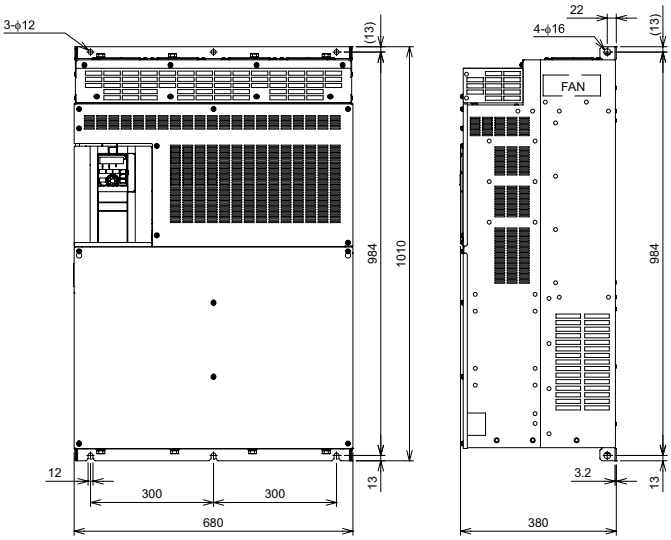

All dimensions in mm

■ FR-A842

FR-A842-07700, FR-A842-08660

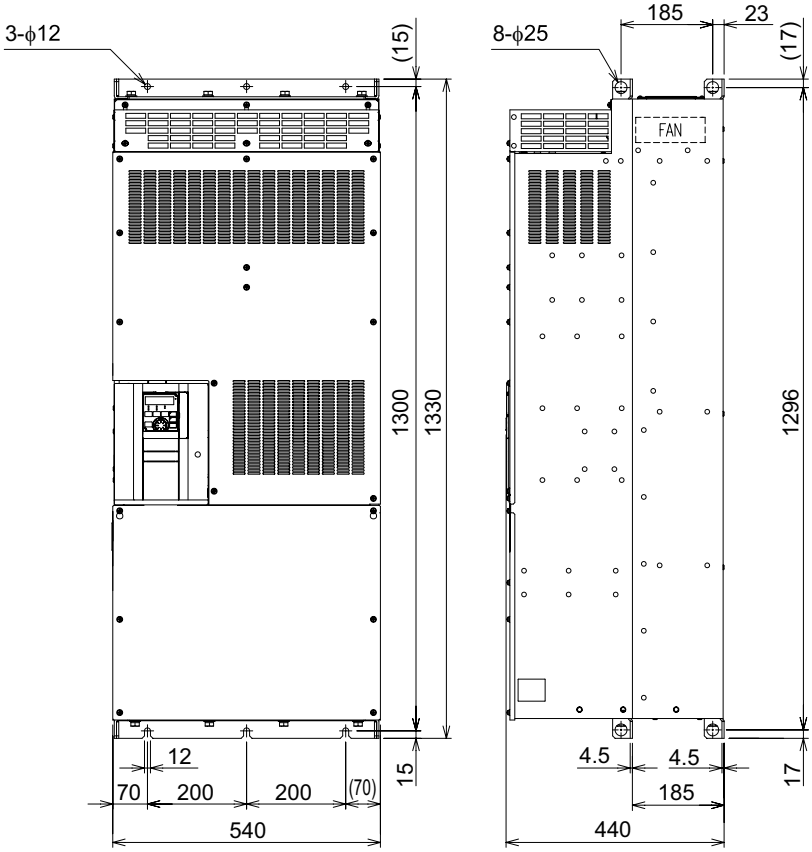

FR-A842-09620, FR-A842-10940, FR-A842-12120

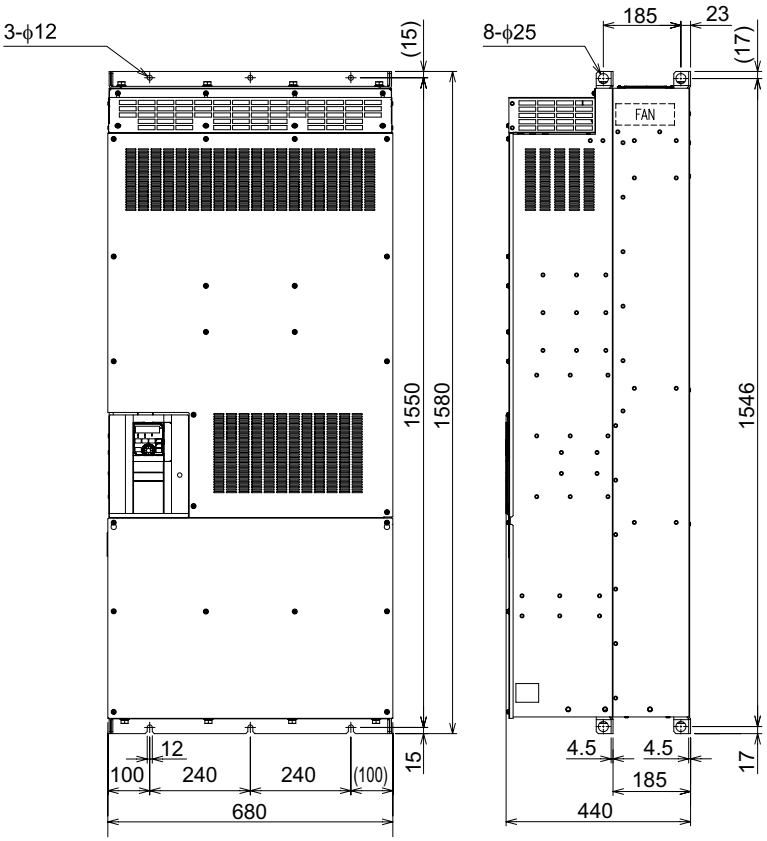

■ FR-CC2

FR-CC2-H315K, H355K

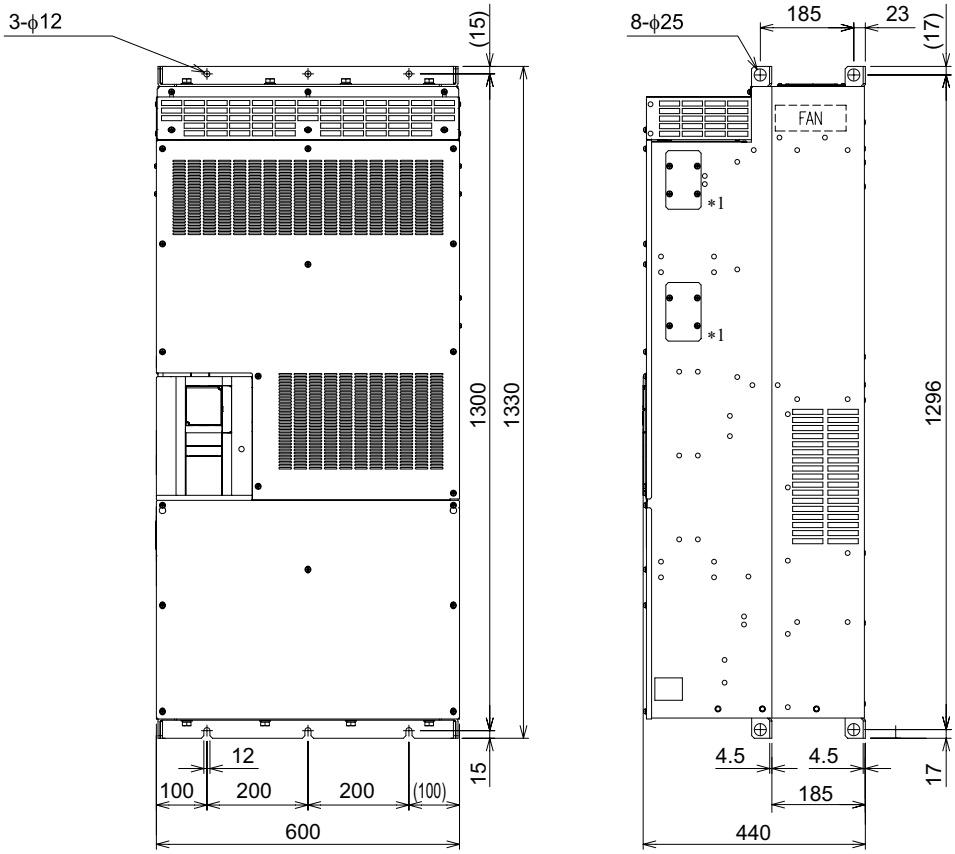

FR-CC2-H400K, H450K, H500K

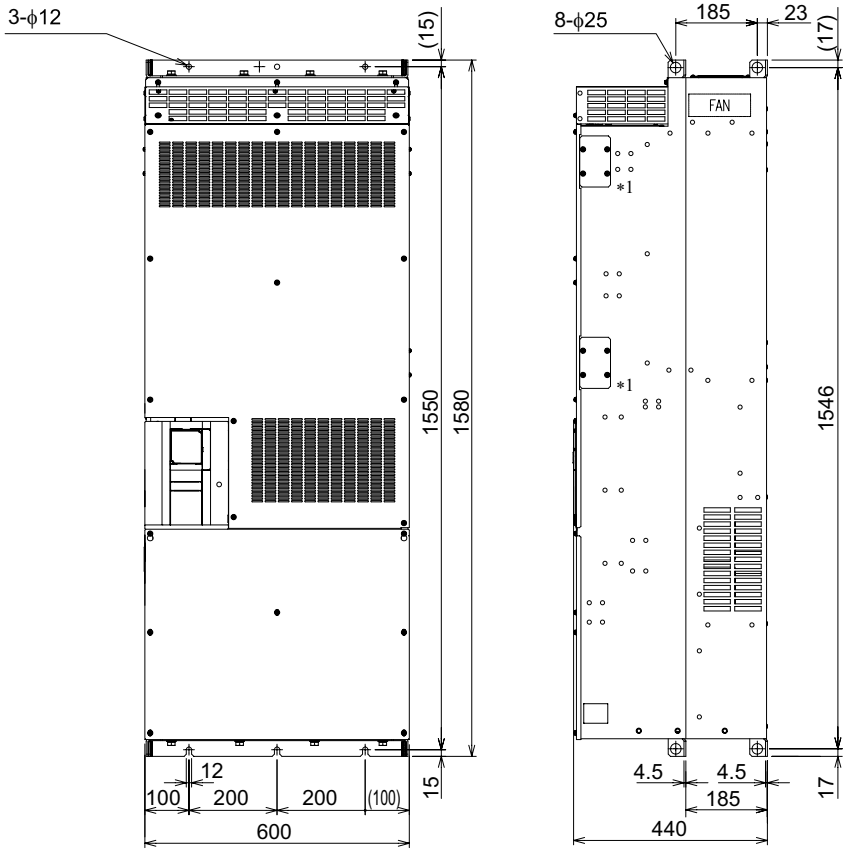

■ DC Choke FFR-HEL-(H)-E

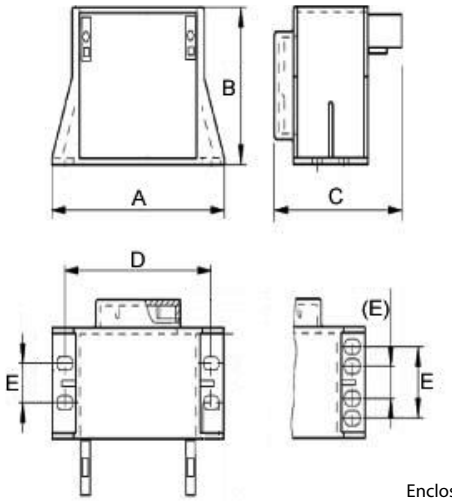

Enclosure type IP20

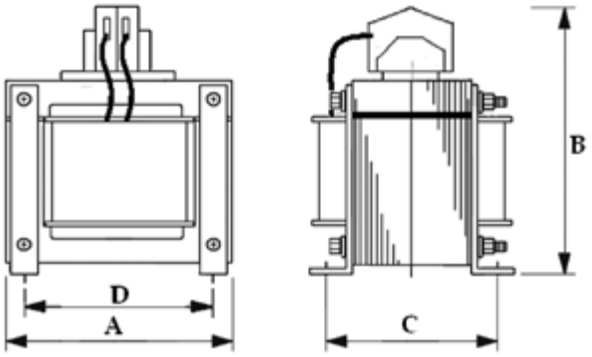

Enclosure type IP00

	Choke	A	B	C	D	E	Weight [kg]	Enclosure type
200 V types	FFR-HEL-0.4K-E	88	53.5	70	75	13	0.6	IP20
	FFR-HEL-0.75K-E	88	53.5	70	75	13	0.6	
	FFR-HEL-1.5K-E	112.5	71.5	81	98	33	1.2	
	FFR-HEL-2.2K-E	112.5	71.5	81	98	33	1.2	
	FFR-HEL-3.7K-E	120	74.7	86	102	33	1.5	
	FFR-HEL-5.5K-E	133.2	85	112	115	50	3.1	
	FFR-HEL-7.5K-E	133.2	85	112	115	50	3.1	
	FFR-HEL-11K-E	133.2	85	112	115	50	3.1	
	FFR-HEL-15K-E	133.2	85	156	115	64	4	
	FFR-HEL-18.5K-E	133.2	85	163	115	64	4	
	FFR-HEL-22K-E	172	107	166	150	65	5.5	
	FFR-HEL-30K-E	150	237	94	125	—	8.2	IP00
	FFR-HEL-37K-E	150	237	114	125	—	10.7	
	FFR-HEL-45K-E	150	237	134	125	—	11.3	
	FFR-HEL-55K-E	150	237	134	125	—	14.4	
400 V types	FFR-HEL-H0.4K-E	75	43	60	62	12	0.35	IP20
	FFR-HEL-H0.75K-E	88	53.5	70	75	13	0.6	
	FFR-HEL-H1.5K-E	88	53.5	70	75	13	0.61	
	FFR-HEL-H2.2K-E	112.5	71.5	81	98	33	1.2	
	FFR-HEL-H3.7K-E	112.5	71.5	81	98	33	1.2	
	FFR-HEL-H5.5K-E	120	74.7	86	102	33	1.5	
	FFR-HEL-H7.5K-E	120	74.7	100	102	45	2.2	
	FFR-HEL-H11K-E	133.2	85	112	115	50	3.1	
	FFR-HEL-H15K-E	133.2	85	112	115	50	3	
	FFR-HEL-H18.5K-E	133.2	85	128	115	64	4	
	FFR-HEL-H22K-E	172	107	166	150	65	5.3	
	FFR-HEL-H30K-E	172	107	166	150	65	5.75	
	FFR-HEL-H37K-E	172	107	186	150	85	8	
	FFR-HEL-H45K-E	150	202	114	125	—	11.3	IP00
	FFR-HEL-H55K-E	150	212	134	125	—	14.4	

All dimensions in mm

■ DC Choke FR-HEL-H75K/H90K

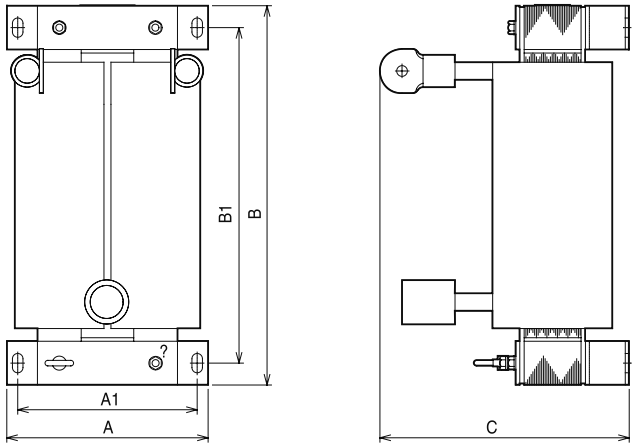

	Choke	A	A1	B	B1	C	Weight [kg]
200 V types	FR-HEL-75K	150	130	340	310	190	17
	FR-HEL-90K	150	130	340	310	200	19
	FR-HEL-110K	175	150	400	365	200	20
400 V types	FR-HEL-H75K	140	120	320	295	185	16
	FR-HEL-H90K	150	130	340	310	190	20

All dimensions in mm

■ DC Chokes FR-HEL-H110K–H160K

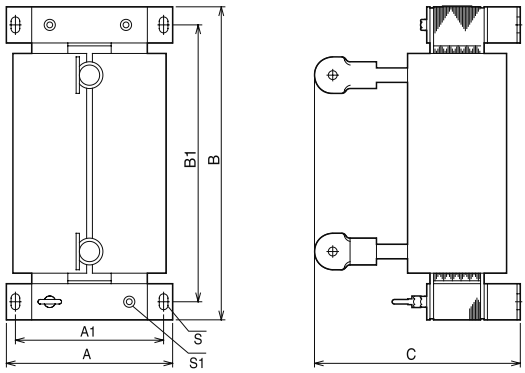

Choke	A	A1	B	B1	C	S	S1	Weight [kg]
FR-HEL-H110K	150	130	340	310	195	M6	M6	22
FR-HEL-H132K	175	150	405	370	200	M8	M6	26
FR-HEL-H160K	175	150	405	370	205	M8	M6	28

All dimensions in mm

■ DC Chokes FR-HEL-H185K–H355K

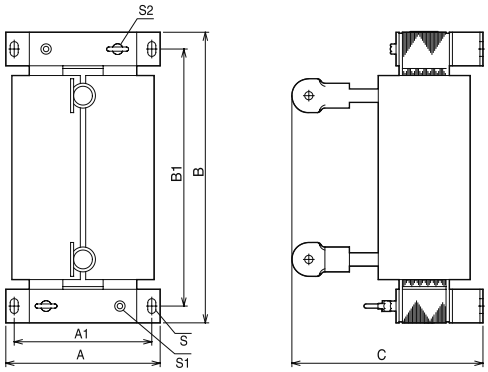

Choke	A	A1	B	B1	C	S	S1	S2	Ø	Weight [kg]
FR-HEL-H185K	175	150	405	370	240	M8	M6	—	M12	29
FR-HEL-H220K	175	150	405	370	240	M8	M6	M6	M12	30
FR-HEL-H250K	190	165	440	400	250	M8	M8	M8	M12	35
FR-HEL-H280K	190	165	440	400	255	M8	M8	M8	M16	38
FR-HEL-H315K	210	185	495	450	250	M10	M8	M8	M16	42
FR-HEL-H355K	210	185	495	450	250	M10	M8	M8	M16	46

All dimensions in mm

■ DC Chokes FR-HEL-H400K–H450K

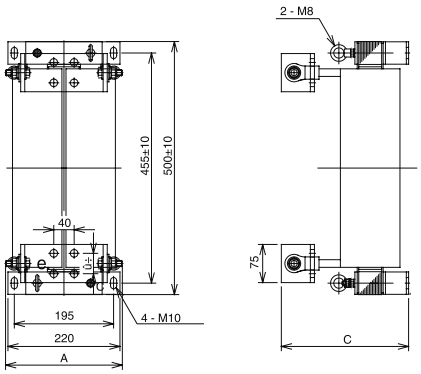

Choke	A	C	Weight [kg]
FR-HEL-H400K	235	250	50
FR-HEL-H450K	240	270	57

All dimensions in mm

■ DC Chokes FR-HEL-H500K–H630K

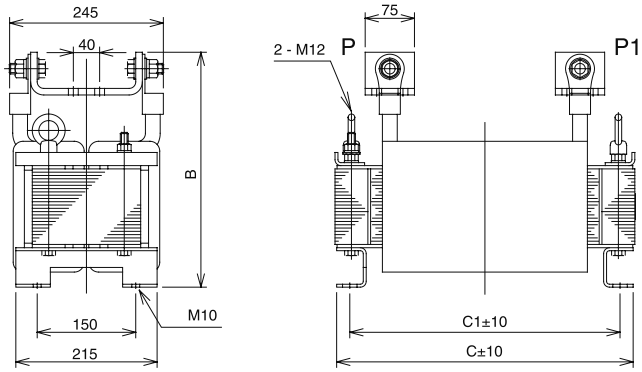

Choke	B	C	C1	Weight [kg]
FR-HEL-H500K	345	455	405	67
FR-HEL-H560K	360	460	410	85
FR-HEL-H630K	360	460	410	95

All dimensions in mm

■ DC Chokes FR-HEL-N355K

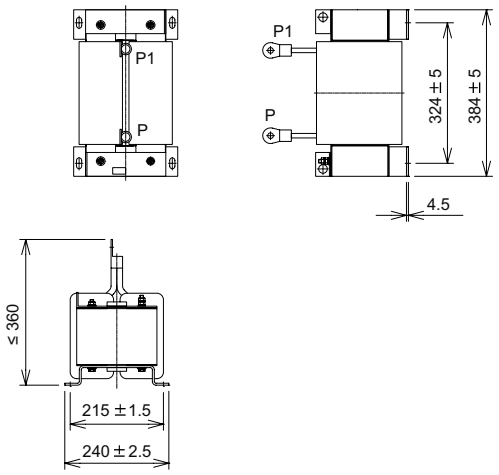

Choke	W	H	D	Weight [kg]
FR-HEL-N355K	≤360	384 ±5	240 ±2.5	80

All dimensions in mm

■ DC Chokes FR-HEL-N560K

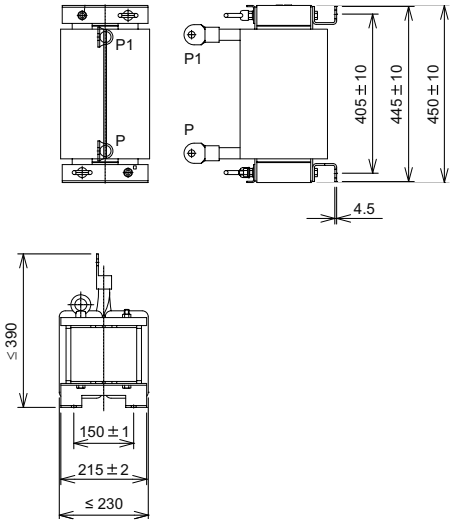

Choke	W	H	D	Weight [kg]
FR-HEL-N560K	≤390	450 ±10	≤230	105

All dimensions in mm

■ DC Chokes FR-BAL-S-B-□□K

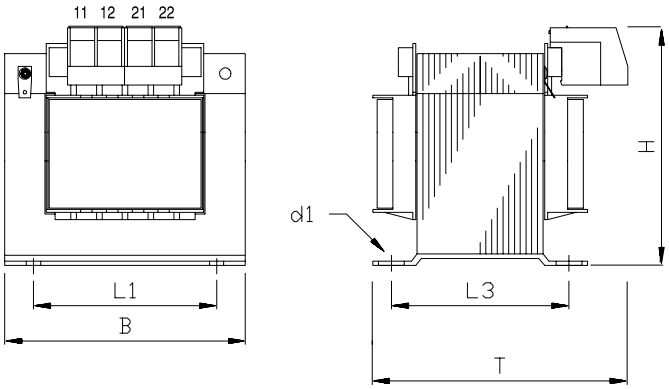

Choke	B	T	H	L1	L3	d1	Weight [kg]
FR-BAL-S-B-0.2K	66	70	86	50	41	4.5	0.7
FR-BAL-S-B-0.4K	78	88	95	56	47	4.5	1.2
FR-BAL-S-B-0.75K	96	120	115	84	86	5.5	4.5

All dimensions in mm

■ Three-Phase AC Chokes FR-BAL-B-□□K

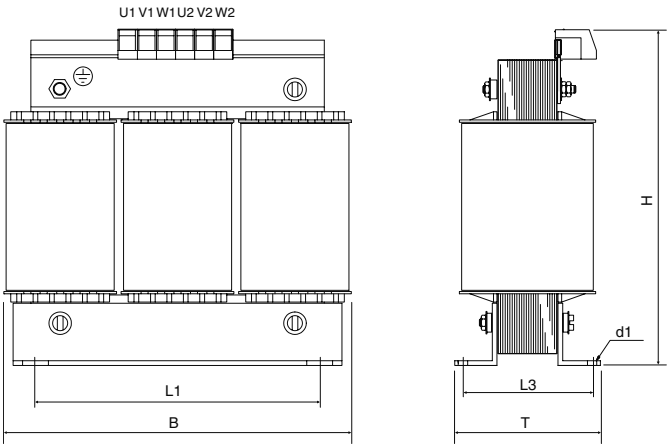

Choke	B	T	H	L1	L3	d1	Weight [kg]
FR-BAL-B-4.0K	125	82	130	100	56	5x8	3.0
FR-BAL-B-5.5K	155	85	145	130	55	8x12	3.7
FR-BAL-B-7.5K	155	100	150	130	70	8x12	5.5
FR-BAL-B-11K/-15K	190	115	210	170	79	8x12	10.7
FR-BAL-B-22K	190	115	210	170	79	8x12	11.2
FR-BAL-B-30K	190	118	230	170	79	8x12	3.0
FR-BAL-B-37K	210	128	265	175	97	8x12	3.7
FR-BAL-B-45K	230	165	280	180	122	8x12	5.5
FR-BAL-B-55K	240	140	305	190	97	11x12	10.7

All dimensions in mm

■ Noise Filters for FR-D720S SC

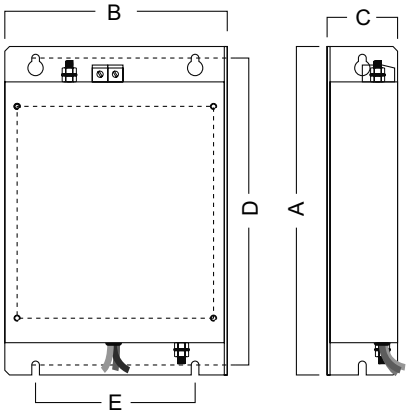

Filter	Frequency inverter	A	B	C	D	E
FFR-CS-050-14A-RF1	FR-D720S-008–042SC	168	72	38	158	56
FFR-CS-050-14A-RF1-LL						
FFR-CS-080-20A-RF1	FR-D720S-070SC	168	113	38	158	96
FFR-CS-080-20A-RF1-LL						
FFR-CS-110-26A-RF1	FR-D720S-100SC	214	145	46	200	104
FFR-CS-110-26A-RF1-LL						

All dimensions in mm

■ Noise Filters for FR-D720S SC

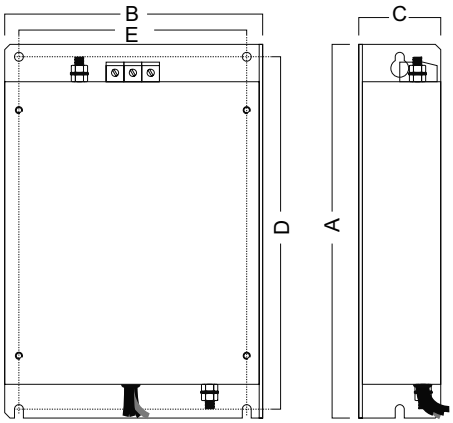

Filter	Frequency inverter	A	B	C	D	E
FFR-CSH-036-8A-RF1	FR-D740-012–036SC	168	114	45	158	96
FFR-CSH-036-8A-RF1-LL						
FFR-CSH-080-16A-RF1	FR-D740-050/080SC	168	114	45	158	96
FFR-CSH-080-16A-RF1-LL						
FFR-MSH-170-30A-RF1	FR-D740-120/160SC	210	225	55	198	208
FFR-MSH-170-30A-RF1-LL						
FFR-MSH-170-30A-RB1-LL		210	150	55	200	30

All dimensions in mm

■ Noise Filters for FR-E720S-008–030SC

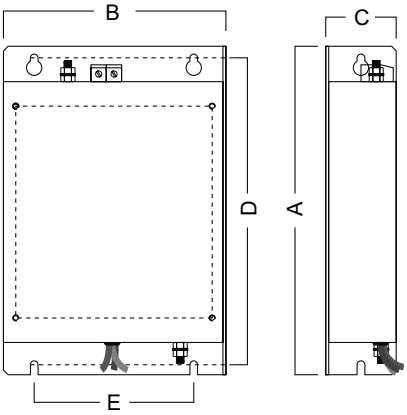

Filter	Frequency inverter	A	B	C	D	E
FFR-CS-050-14A-RF1	FR-E720S-008–030SC	168	72	38	158	56
FFR-CS-050-14A-RF1-LL						
FFR-CS-080-20A-RF1	FR-E720S-050/080SC	168	113	38	158	96
FFR-CS-080-20A-RF1-LL						
FFR-CS-110-26A-RF1	FR-E720S-110SC	214	145	46	200	104
FFR-CS-110-26A-RF1-LL						

All dimensions in mm

■ Noise Filters for FR-E740 SC

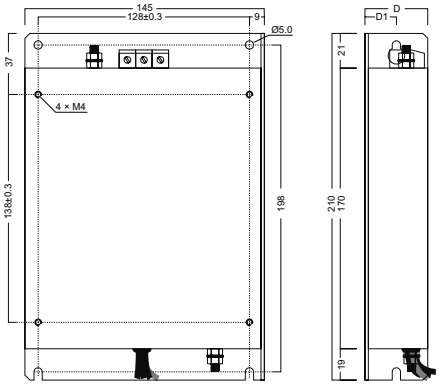

Filter	Frequency inverter	A	B	C	D	E
FFR-MSH-040-8A-RF1	FR-E740-016-040SC	210	145	38	198	128
FFR-MSH-095-16A-RF1	FR-E740-060/095SC	210	145	46	198	128
FFR-MSH-170-30A-RF1	FR-E740-120/170SC	210	225	55	198	208
FFR-MSH-170-30A-RF1-LL		210	225	55	198	208
FFR-MSH-170-30A-RB1-LL		210	150	55	200	30
FFR-MSH-300-50A-RF1	FR-E740-230/300SC	318	216	56	302	195

All dimensions in mm

■ Noise Filters for FR-A/F740-00023–01800

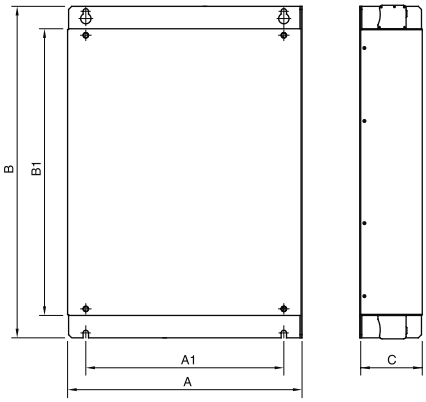

Filter	Frequency inverter	A	A1	B	B1	C
FFR-BS-00126-18A-SF100	FR-A/F740-00023–00126	150	110	315	260	50
FFR-BS-00250-30A-SF100	FR-A/F740-00170/00250	220	180	315	260	60
FFR-BS-00380-55A-SF100	FR-A/F740-00310/00380	221.5	180	360	300	80
FFR-BS-00620-75A-SF100	FR-A/F740-00470/00620	251.5	210	476	400	80
FFR-BS-00770-95A-SF100	FR-A/F740-00770	340	280	626	550	90
FFR-BS-01160-120A-SF100	FR-A/F740-01160	450	380	636	550	120
FFR-BS-01800-180A-SF100	FR-A/F740-00930/01800	450	380	652	550	120

All dimensions in mm

■ Noise Filters for FR-A/F740-02160–12120

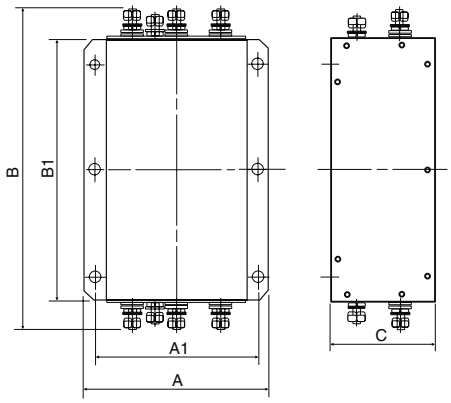

Filter	Frequency inverter	A	A1	B	B1	C
FN 3359-250-28	FR-A/F740-02160–02600	230	205	360	300	125
FN 3359-400-99	FR-A/F740-03250–04320	260	235	386	300	115
FN 3359-600-99	FR-A/F740-04810–06100	260	235	386	300	135
FN 3359-1000-99	FR-A/F740-06830–09620	280	255	456	350	170
FN 3359-1600-99	FR-A/F740-10940–12120	300	275	586	400	160

All dimensions in mm

■ Noise Filters for FR-F746-00023–01160

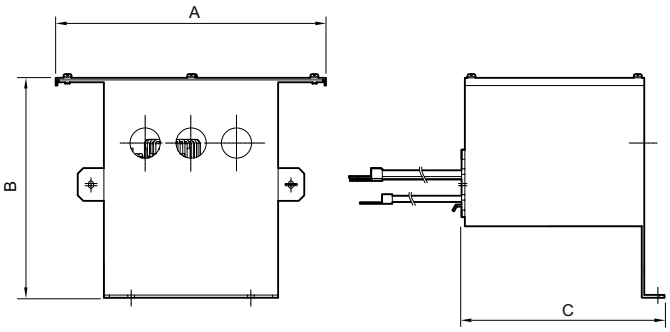

Filter	Frequency inverter	A	B	C
FFR-AF-IP54-21A-SM 2	FR-A/F746-00023–00126	248.5	201	186.5
FFR-AF-IP54-44A-SM 2	FR-A/F746-00170–00250	318.5	231	231.5
FFR-AF-IP54-62A-SM 2	FR-A/F746-00310–00380	318.5	251	239.5
FFR-AF-IP54-98A-SM 2	FR-A/F746-00470–00620	350	251	308
FFR-AF-IP54-117A-SM 2	FR-A/F746-00770	325	185	308
FFR-AF-IP54-172A-SM 2	FR-A/F746-00930–01160	464	301.5	481

All dimensions in mm

■ Noise Filters for FR-A741-5.5K–55K

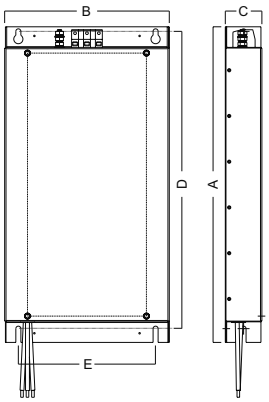

Filter	Frequency inverter	A	B	C	D	E
FFR-RS-7.5k-27A-EF100	FR-A741-5.5K–7.5K	560	250	60	525	200
FFR-RS-15k-45A-EF100	FR-A741-11K–15K	690	300	70	650	250
FFR-RS-22k-65A-EF100	FR-A741-18.5K–22K	690	360	80	650	300
FFR-RS-45k-127A-EF100	FR-A741-30K–45K	815	470	90	775	400
FFR-RS-55k-159A-EF100	FR-A741-55K	995	600	107	955	500

All dimensions in mm

■ Noise Filters for FR-A770

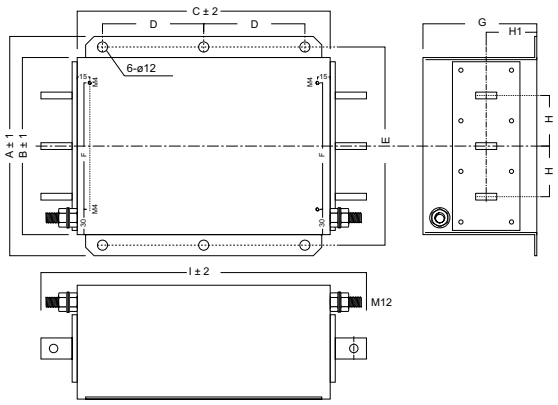

Filter	Frequency inverter	A	B	C	D	E	F	G	H	H1	I
FFR-VBS-690V-600A-RB100	FR-A770-355K-79	260	210	300	120	235	150	135 ±	60 ±	60 ±	386
FFR-VBS-690V-800A-RB100	FR-A770-560K-79	280	230	350	145	255	170	170	60	85	456

All dimensions in mm

■ du/dt Filters

Filter type A

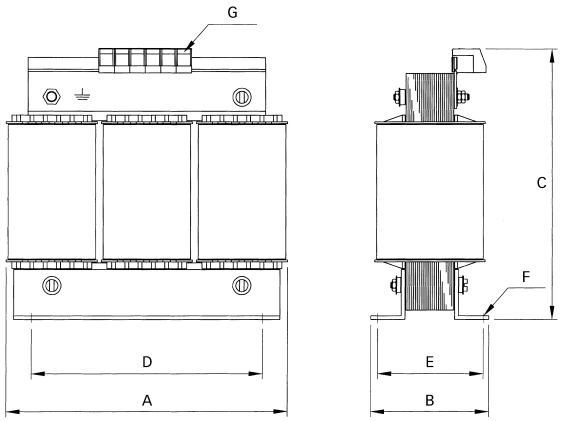

Filter type B

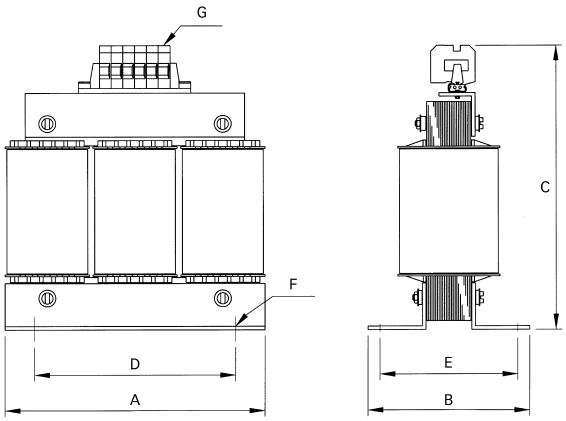

du/dt Filter	A	B	C	D	E	F	G	Type
FFR-DT-10A-SS1	100	65	120	56	43	4.8x8	2.5 mm²	A
FFR-DT-25A-SS1	125	80	140	100	55	5x8	4 mm²	A
FFR-DT-47A-SS1	155	110	195	130	70	8x12	10 mm²	A
FFR-DT-93A-SS1	190	100	240	130	70	8x12	16 mm²	A
FFR-DT-124A-SS1	190	150	170	130	67	8x12	35 mm²	B
FFR-DT-182A-SS1	210	160	185	175	95	8x12	ø10	B
FFR-DT-330A-SS1	240	240	220	190	135	11x15	ø12	B
FFR-DT-500A-SS1	240	220	325	190	119	11x15	ø10	B
FFR-DT-610A-SS1	240	230	325	190	128	11x15	ø11	B
FFR-DT-683A-SS1	240	230	325	190	128	11x15	ø11	B
FFR-DT-790A-SS1	300	218	355	240	136	11x15	ø11	B
FFR-DT-1100A-SS1	360	250	380	310	144	11x15	ø11	B
FFR-DT-1500A-SS1	360 ①	250 ①	①	①	①	①	①	B
FFR-DT-1920A-SS1	360 ①	250 ①	①	①	①	①	①	B

① Under review, may be subject to change

All dimensions in mm

■ Sinusoidal Filters

Filter type A

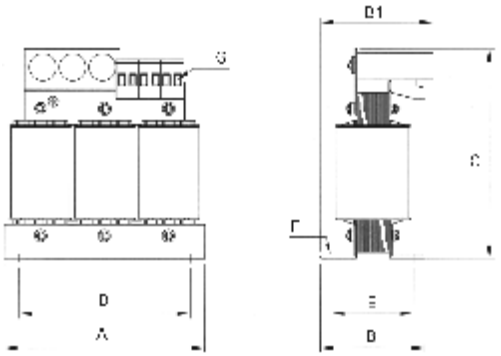

Filter type B

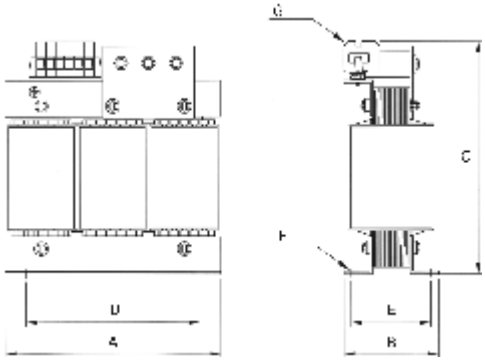

Sinusoidal Filter	A	B	C	D	E	F	G	Type
FFR-S I-4.5A-SS1	125	75	180	100	55	5x8	2.5 mm²	A
FFR-SI-8.3A-SS1	155	95	205	130	70	8x12	4 mm²	A
FFR-SI-18A-SS1	190	130	210	170	78	8x12	10 mm²	A
FFR-SI-25A-SS1	210	125	270	175	85	8x12	10 mm²	A
FFR-SI-32A-SS1	210	135	270	175	95	8x12	10 mm²	A
FFR-SI-48A-SS1	240	210	300	190	125	11x15	16 mm²	B
FFR-SI-62A-SS1	240	220	300	190	135	11x15	16 mm²	B
FFR-SI-77A-SS1	300	210	345	240	134	11x15	35 mm²	B
FFR-SI-93A-SS1	300	215	345	240	139	11x15	35 mm²	B
FFR-SI-116A-SS1	300	237	360	240	161	11x15	95 mm²	B
FFR-SI-180A-SS1	420	235	510	370	157	11x15	11 mm²	
FFR-SI-260A-SS1	420	295	550	370	217	11x15	11 mm²	
FFR-SI-432A-SS1	510	320	650	430	238	13x18	11 mm²	
FFR-SI-481A-SS1	510	340	750	430	247	13x18	14 mm²	
FFR-SI-683A-SS1	600	390	880	525	270	13x18	18 mm²	
FFR-SI-770A-SS1	600	430	990	525	290	13x18	18 mm²	
FFR-SI-880A-SS1	600	500	1000	525	350	13x18	18 mm²	
FFR-SI-1212A-SS1	870	420	1050	750	320	13x18	2x18 mm²	
FFR-SI-1500A-SS1 ①	①	①	①	①	①	①	①	
FFR-SI-1700A-SS1 ①	①	①	①	①	①	①	①	

① Under review, may be subject to change

All dimensions in mm

■ Brake Units BU-UFS

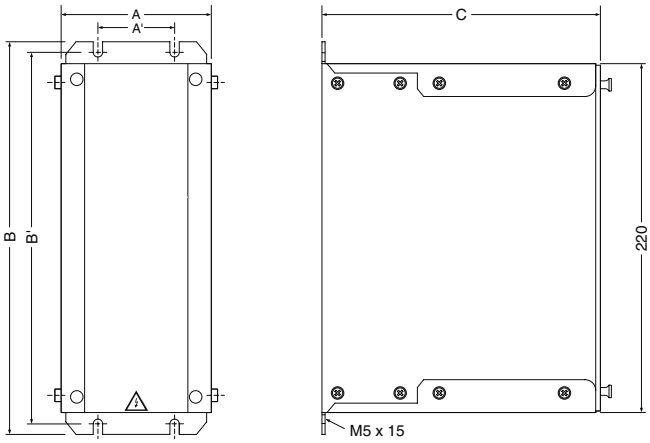

Brake unit	A	A'	B	B'	C	Weight [kg]
BU-UFS22J	100	50	250	240	175	2.4
BU-UFS22	100	50	250	240	175	2.5
BU-UFS40	100	50	250	240	175	2.5
BU-UFS110	107	50	250	240	195	3.9

All dimensions in mm

■ Brake Units FR-BU2-1.5K–15K, FR-BU2-H7.5K/H15K

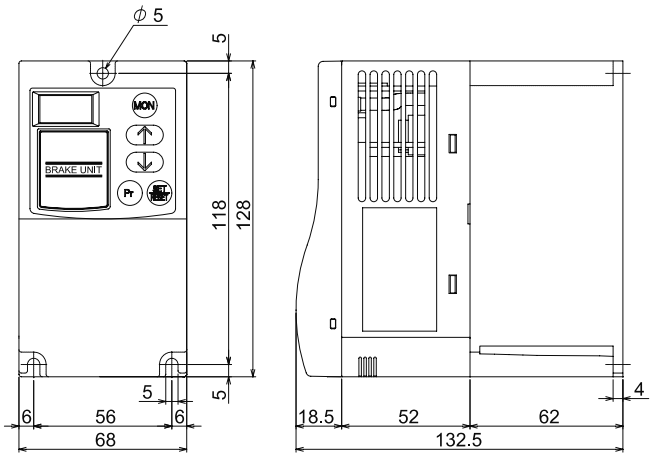

Brake unit	H	W	D	Weight [kg]
FR-BU2-1.5k	128	68	132.5	0.9
FR-BU2-3.7k	128	68	132.5	0.9
FR-BU2-7.5k	128	68	132.5	0.9
FR-BU2-15k	128	68	132.5	0.9
FR-BU2-H7.5k	128	68	132.5	5
FR-BU2-H15k	128	68	132.5	5

All dimensions in mm

■ Brake Units FR-BU2-30K/H30K

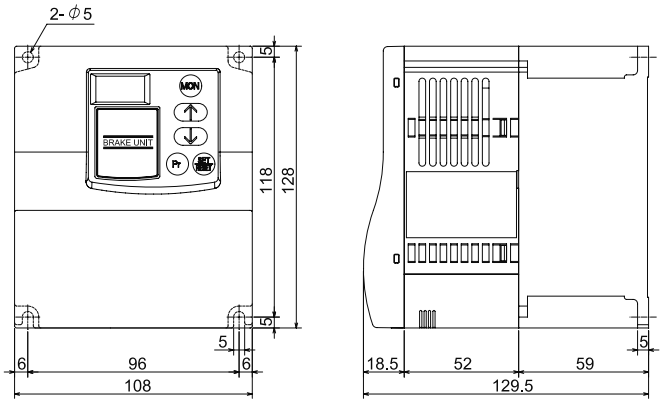

Brake unit	H	W	D	Weight [kg]
FR-BU2-30k	128	108	129.5	5
FR-BU2-H30k	128	108	129.5	5

All dimensions in mm

■ Brake Units FR-BU2-55K/H55K/H75k

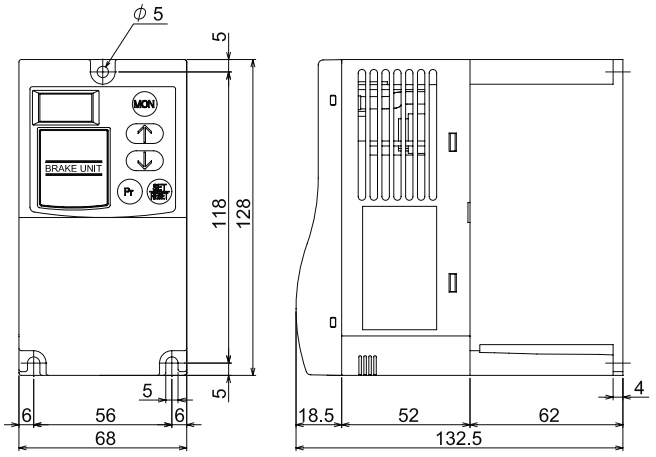

Brake unit	H	W	D	Weight [kg]
FR-BU2-55k	128	68	132.5	5
FR-BU2-H55k	128	68	132.5	5
FR-BU2-H75k	128	68	132.5	5

All dimensions in mm

■ External Brake Resistors RUFC

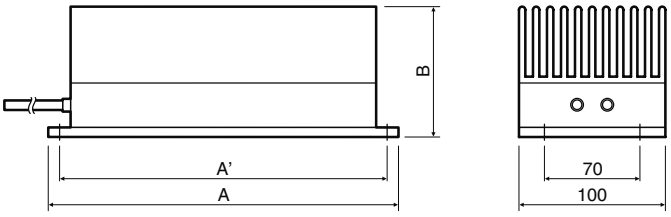

Brake resistor	A	A'	B	Weight [kg]
RUFC22	310	295	75	4.7
RUFC40	365	350	75	9.4
RUFC110	365	350	75	18.8

Remark:
RUFC40 contains a set of two brake resistors, and RUFC110 contains a set of four brake resistors as shown on the left.

All dimensions in mm

■ External Brake Resistors FR-ABR-□□K

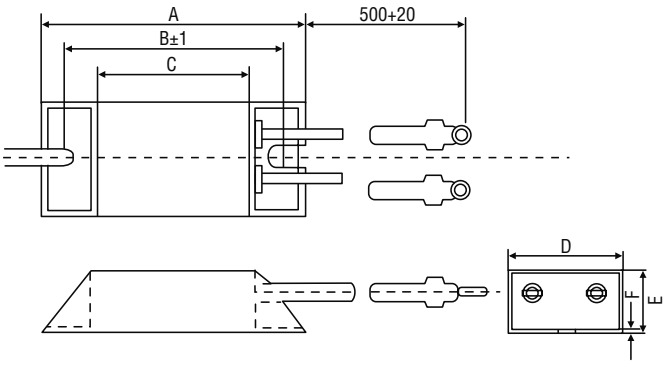

Brake resistor	A	B	C	D	E	F	Weight [kg]
FR-ABR-0.4K	115	100	75	40	20	2.5	0.2
FR-ABR-0.75K	140	125	100	40	20	2.5	0.2
FR-ABR-1.5K	215	200	175	40	20	2.5	0.4
FR-ABR-2.2K	240	225	200	50	25	2.0	0.5

All dimensions in mm

■ External Brake Resistors FR-ABR-H□□K

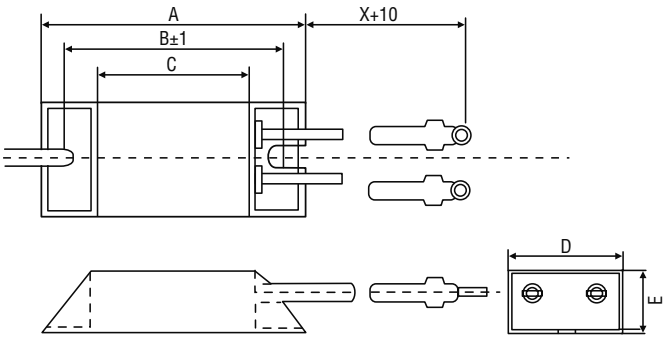

Brake resistor	A	B	C	D	E	X	Weight [kg]
FR-ABR-H0.4K	115	100	75	40	20	500	0.2
FR-ABR-H0.75K	140	125	100	40	20	500	0.2
FR-ABR-H1.5K	215	200	175	40	20	500	0.4
FR-ABR-H2.2K	240	225	200	50	25	500	0.5
FR-ABR-H3.7K	215	200	175	60	30	500	0.8
FR-ABR-H5.5K	335	320	295	60	30	500	1.3
FR-ABR-H7.5K	400	385	360	80	40	500	2.2
FR-ABR-H 11K	400	—	—	100	50	700	3.2
FR-ABR-H 15K	300	—	—	100	50	700	2.4 (x2) serial
FR-ABR-H 22K	400	—	—	100	50	700	3.3 (x2) parallel

All dimensions in mm

■ Profibus-Gateway PBDP-GW-G8/E8

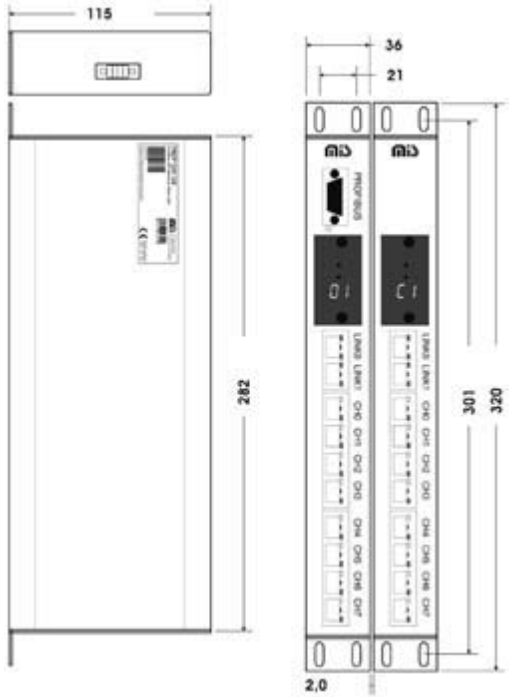

All dimensions in mm

Remark:
The space between main unit and extension unit has to be 2 mm or more.

■ Harmonic Converter FR-HC2-(H)□K

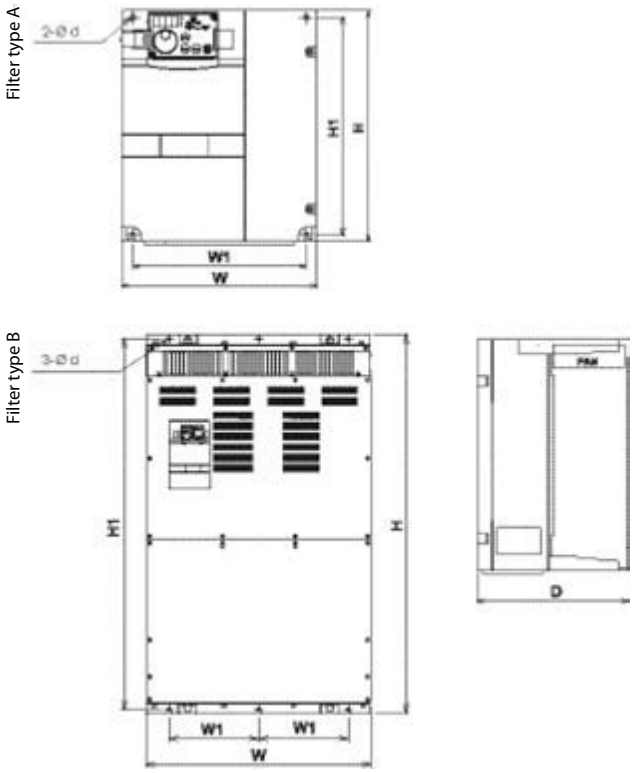

High power factor converter		W	W1	H	H1	D	d	Type	Weight [kg]
200 V types	FR-HC2-7.5K	220	195	260	245	170	6	A	7
	FR-HC2-15K	250	230	400	380	190	10	A	12
	FR-HC2-30K	325	270	550	530	195	10	A	24
	FR-HC2-55K	370	300	620	595	250	10	A	39
	FR-HC2-75K	465	400	620	595	300	12	A	53
400 V types	FR-HC2-H7.5K/H15K	220	195	300	285	190	6	A	9
	FR-HC2-H30K	325	270	550	530	195	10	A	26
	FR-HC2-H55K	370	300	670	645	250	10	A	43
	FR-HC2-H75K	325	270	620	595	250	10	A	37
	FR-HC2-H110K	465	400	620	595	300	12	A	56
	FR-HC2-H160K/H220K	498	200	1010	985	380	12	B	120
	FR-HC2-H280K	680	300	1010	984	380	12	B	160
	FR-HC2-H400K/H560K	790	315	1330	1300	440	12	B	250

All dimensions in mm

■ Filter Chokes FR-HCL21-(H)□K for FR-HC2

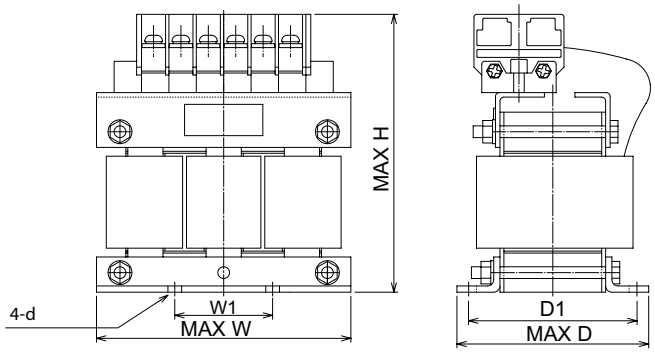

	Filter chokes	W*	W1	H	D*	D1	d	Weight [kg]
200 V types	FR-HCL21-7.5K	132	50 ±0.5	150	100	86 +0/-2.5	M6	4.2
	FR-HCL21-15K	162	75 ±0.5	172	126	107 +0/-2.5	M6	7.0
	FR-HCL21-30K	195	75 ±0.5	210	150	87 +0/-2.5	M6	10.7
	FR-HCL21-55K	210	75 ±0.5	180	200.5	97 +0/-2.5	M6	17.4
	FR-HCL21-75K	240	150 ±1	215	215.5	109 +0/-2.5	M8	23
400 V types	FR-HCL21-H7.5K	132	50 ±0.5	140	105	90 +0/-1	M6	4
	FR-HCL21-H15K	162	75 ±0.5	170	128	105 +0/-1	M6	6
	FR-HCL21-H30K	182	75 ±0.5	195	145.5	90 +0/-1	M6	9
	FR-HCL21-H55K	282.5	255 ±1.5	245	165	112 ±1.5	M6	18
	FR-HCL21-H75K	210	75 ±1	175	210.5	105 +0/-2.5	M6	20
	FR-HCL21-H110K	240	150 ±1	230	220	99 +0/-5	M8	28
	FR-HCL21-H160K	280	150 ±1	295	274.5	150 +0/-5	M8	45
	FR-HCL21-H220K	330	170 ±1	335	289.5	150 +0/-5	M10	63
	FR-HCL21-H280K	330	170 ±1	335	321	203 +0/-5	M10	80
	FR-HCL21-H400K	402	250 ±1	460	550	305 ±10	M10	121
	FR-HCL21-H560K	452	300 ±1	545	645	355 ±10	M12	190

* The sizes indicated by W and D are not the sizes of the legs. These indicate the sizes of whole chokes.

All dimensions in mm

■ Filter Chokes FR-HCL22-(H)□K for FR-HC2

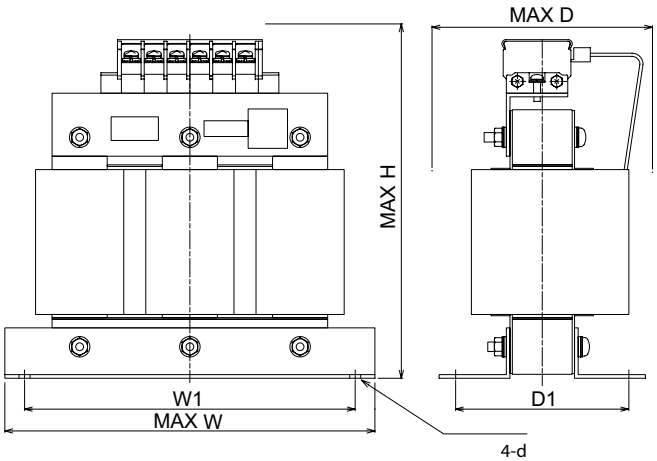

	Filter chokes	W*	W1	H	D*	D1	d	Weight [kg]
200 V types	FR-HCL22-7.5K	237.5	210 ±1.5	230	140	110 ±1.5	M6	9.8
	FR-HCL22-15K	257.5	230 ±1.5	260	165	120 ±1.5	M6	19
	FR-HCL22-30K	342.5	310 ±1.5	305	180	130 ±1.5	M8	36
	FR-HCL22-55K	432.5	270 ±1.5	380	280	240 ±1.5	M8	65
	FR-HCL22-75K	474	430 ±2	460	280	128 ±2	M12	98
400 V types	FR-HCL22-H7.5K	237.5	210 ±1.5	220	140	110 ±1.5	M6	9.8
	FR-HCL22-H15K	257.5	230 ±1.5	260	165	120 ±1.5	M6	19
	FR-HCL22-H30K	342.5	310 ±1.5	300	180	130 ±1.5	M8	36
	FR-HCL22-H55K	392.5	360 ±1.5	365	200	130 ±1.5	M8	65
	FR-HCL22-H75K	430	265 ±1.5	395	280	200 ±1.5	M10	120
	FR-HCL22-H110K	500	350 ±1.5	440	370	260 ±1.5	M10	175
	FR-HCL22-H160K	560	400 ±1.5	520	430	290 ±1.5	M12	250
	FR-HCL22-H220K	620	400 ±1.5	620	480	320 ±1.5	M12	345
	FR-HCL22-H280K	690	500 ±2	700	560	350 ±2	M12	450
	FR-HCL22-H400K	632	400 ±2	675	705	435 ±10	M12	391
	FR-HCL22-H560K	632	400 ±2	720	745	475 ±10	M12	507

* The sizes indicated by W and D are not the sizes of the legs. These indicate the sizes of whole chokes.

All dimensions in mm

■ Outside Box FR-HCB2-(H)□K for FR-HC2-7.5K–75K, FR-HC2-H7.5K–H220K*

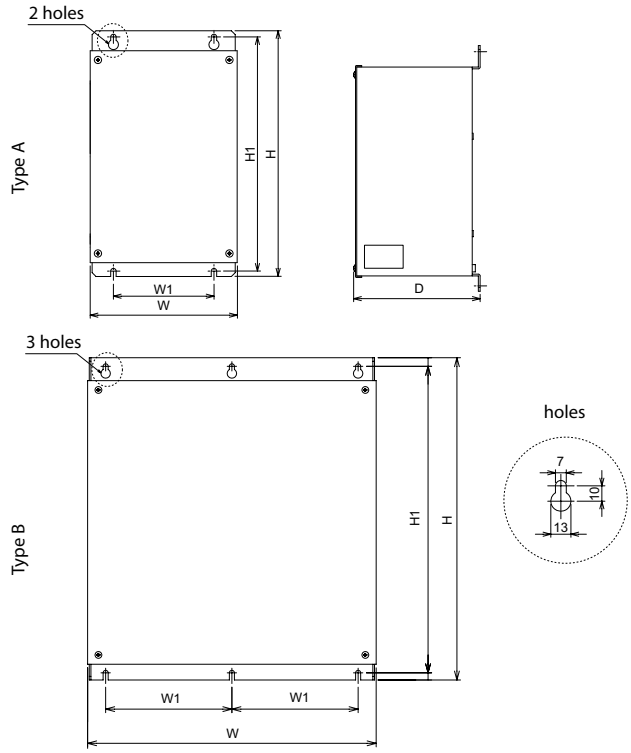

Outside box		W	W1	H	H1	D	Type	Weight [kg]
200 V types	FR-HCB2-7.5K/15K	190	130	320	305	165	A	7
	FR-HCB2-30K	270	200	450	435	203	A	11
	FR-HCB2-55K							13
	FR-HCB2-75K	400	175	450	428	250	A	27
400 V types	FR-HCB2-H7.5K–H30K	190	130	320	305	165	A	8
	FR-HCB2-H55K	270	200	450	435	203	A	16
	FR-HCB2-H75K	300	250	350	328	250	B	16
	FR-HCB2-H110K	350	125	450	428	380	B	37
	FR-HCB2-H160K/ H220K	400	175	450	428	440	B	54

* Peripheral devices are separately provided for the FR-HC2-H280K or higher (not provided as the outside box).

All dimensions in mm

■ Filter Capacitor FR-HCC2-(H)□K for FR-HC2-H280K–H560K

FR-HCC2-H280K

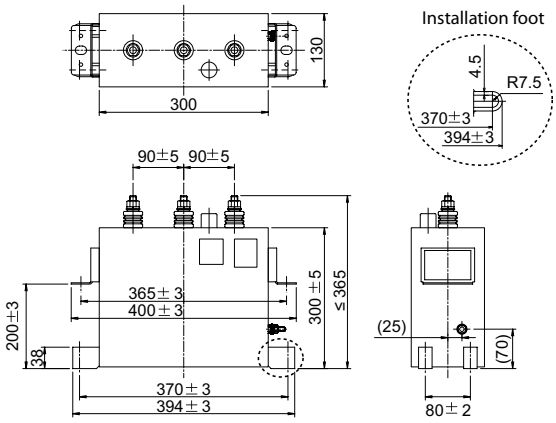

FR-HCC2-H400K

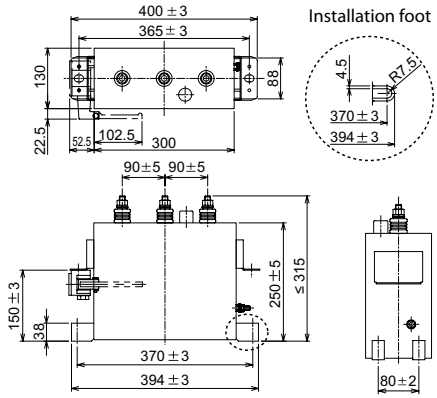

FR-HCC2-H560K

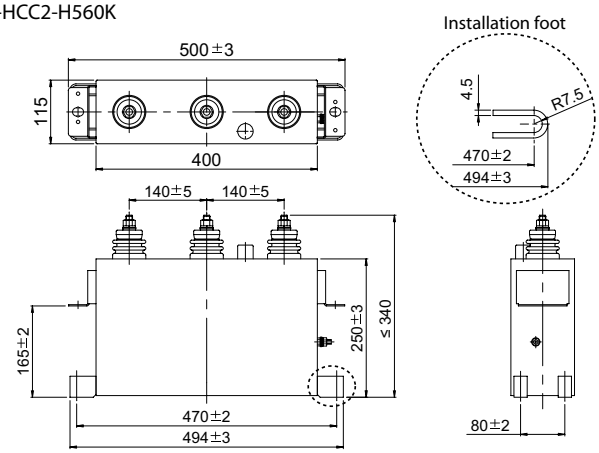

Filter capacitor	W	H	D	Weight [kg]
FR-HCC2-H280K	394 ±3	≤365	130	17
FR-HCC2-H400K	394 ±3	≤315	130	15
FR-HCC2-H560K	494 ±3	≤340	115	21

All dimensions in mm

■ Inrush Current Limit Resistor FR-HCR2-(H)□K for FR-HC2-H280K–H560K

0.96OHM BKO-CA1996H21 (without thermostat)

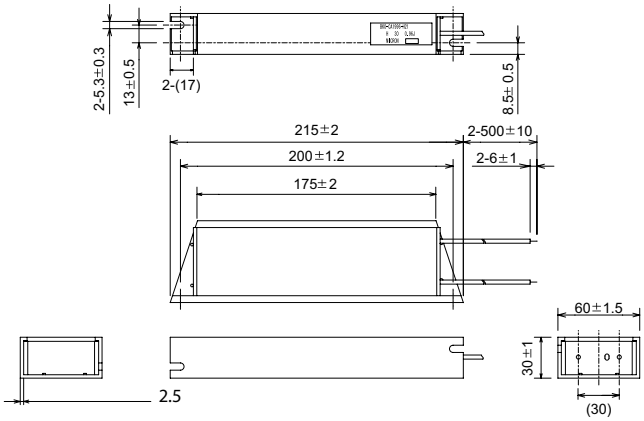

0.96OHM BKO-CA1996H31 (with thermostat)

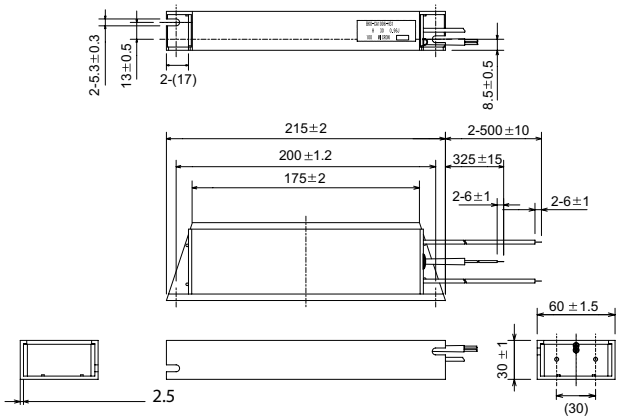

■ Voltage Converter FR-HCM2-(H)□K for FR-HC2-H280K–H560K

MC power supply stepdown transformer BKO-CA2001H06

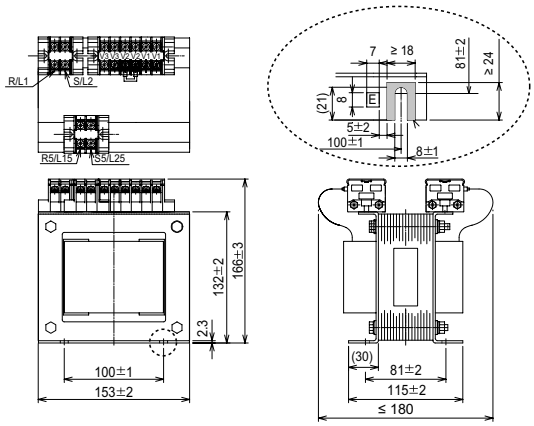

Tranformer	Voltage converter	W	H	D	Weight [kg]
1PH 630VA BKO-CA2001H06	FR-HCM2-H280K–H560K	153 ±2	166 ±3	≤180	10

All dimensions in mm

S-N600FXYS AC210V 2A2B

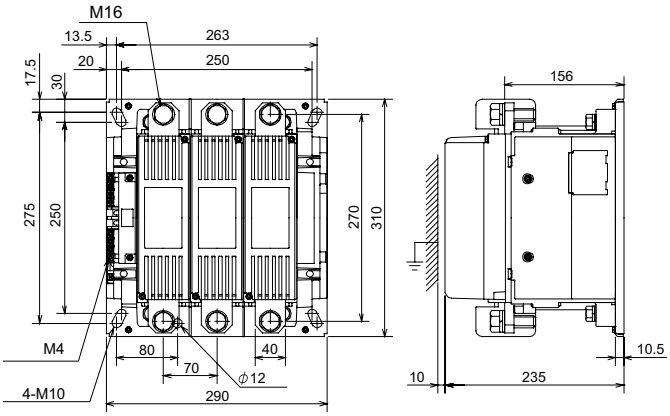

S-N400FXYS AC200V 2A2B

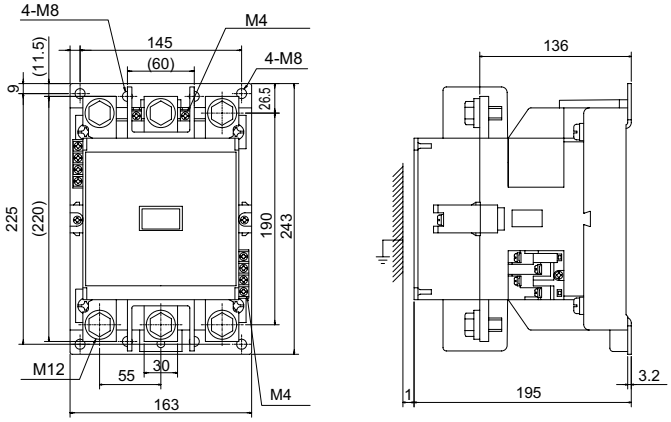

Inrush current limit MC	Voltage converter	W	H	D	Weight [kg]
S-N600FXYS AC210V 2A2B	FR-HCM2-H280K	290	310	235	24
S-N400FXYS AC200V 2A2B	FR-HCM2-H400K/560K	163	243	195	9.5

All dimensions in mm

Specifications of Overseas Types FR-D710W

Product line			FR-D710W			
			0.1K	0.2K	0.4K	0.75K
Output	Rated motor capacity	[kW]	0.1	0.2	0.4	0.75
	Rated current	[A]	0.8	1.4	2.5	4.2
	Overload capacity		150 % of rated motor capacity for 60 s; 200 % for 0.5 s (inverse-time characteristics)			
	Voltage		3-phase, 0 to 230 V AC			
	Frequency range		0.2–400 Hz			
Input	Power supply voltage		Single-phase, 100–115 V AC,			
	Voltage range		90–132 V AC at 50/60 Hz			
	Power supply frequency		50/60 Hz			
Others	Ambient temperature		50 °C			
Order information		Art. no.	219059	219060	219061	219062

Specifications of Overseas Types FR-D720

Product line			FR-D720										
			0.1K	0.2K	0.4K	0.75K	1.5K	2.2K	3.7K	5.5K	7.5K	11k	15k
Output	Rated motor capacity	[kW]	0.1	0.2	0.4	0.75	1.5	2.2	3.7	5.5	7.5	11	15
	Rated current	[A]	0.8	1.4	2.5	4.2	7	10	16.5	23.8	31.8	45A	58A
	Overload capacity		150 % of rated motor capacity for 60 s; 200 % for 0.5 s (inverse-time characteristics)										
	Voltage		3-phase, 0 V up to power supply voltage										
	Frequency range		0.2–400 Hz										
Input	Power supply voltage		3-phase, 200–240 V AC,										
	Voltage range		170–264 V AC at 50/60 Hz										
	Power supply frequency		50/60 Hz										
Others	Ambient temperature		50 °C										
Order information		Art. no.	217399	217400	217401	217402	217403	217404	217415	217416	217417	243781	243782

Specifications of Overseas Types FR-E560

Product line			FR-E560 NA					
			0.75K	1.5K	2.2K	3.7K	5.5K	7.5K
Output	Rated motor capacity	[kW]	0.75	1.5	2.2	3.7	5.5	7.5
	Rated current	[A]	1.7	2.7	4.0	6.1	9.0	12.0
	Overload capacity		150 % of rated motor capacity for 60 s; 200 % for 0.5 s (inverse-time characteristics)					
	Voltage		3-phase, 0 V to power supply voltage					
	Frequency range		0.2–400 Hz					
Input	Power supply voltage		3-phase, 575 V AC, -15 %/+10 %					
	Voltage range		490–632 V AC at 60 Hz					
	Power supply frequency		60 Hz					
Others	Ambient temperature		-10–+40 °C					
Order information		Art. no.	160811	160813	160834	160835	160836	160837

Specifications of Overseas Types FR-E710W

Product line			FR-E710W-008-NA	FR-E710W-015-NA	FR-E710W-030-NA	FR-E710W-050-NA
Output	Rated motor capacity	[kW]	0.1	0.2	0.4	0.75
	Rated current	[A]	0.8	1.5	3	5
	Overload capacity		150 % of rated motor capacity for 60 s; 200 % for 3 s (inverse-time characteristics)			
	Voltage		3-phase, 0 to 230 V AC			
	Frequency range		0.2–400 Hz			
Input	Power supply voltage		Single-phase, 100–115 V AC,			
	Voltage range		90–132 V AC at 50/60 Hz			
	Power supply frequency		50/60 Hz			
Others	Ambient temperature		50 °C			
Order information		Art. no.	225922	225923	225924	225935

Specifications of Overseas Types FR-E720 SC

Product line			FR-E720 SC										
			0.1K	0.2K	0.4K	0.75K	1.5K	2.2K	3.7K	5.5K	7.5K	11K	15K
Output	Rated motor capacity	[kW]	0.1	0.2	0.4	0.75	1.5	2.2	3.7	5.5	7.5	11	15
	Rated current	[A]	0.8	1.5	3	5	8	11	17.5	24	33	47	60
	Overload capacity		150 % of rated motor capacity for 60 s; 200 % for 3 s (inverse-time characteristics)										
	Voltage		3-phase, 0 V up to power supply voltage										
	Frequency range		0.2–400 Hz										
Input	Power supply voltage		3-phase, 200–240 V AC, (283–339 V DC)										
	Voltage range		170–264 V AC at 50/60 Hz (240–373 V DC)										
	Power supply frequency		50/60 Hz										
Others	Ambient temperature		50 °C										
Order information		Art. no.	236465	236466	236467	236468	236469	236470	236471	236472	236473	236474	236475

Specifications of Overseas Types FR-F720P

Product line			FR-F720P								
			0.75K	1.5K	2.2K	3.7K	5.5K	7.5K	11K	15K	18.5K
Output	Rated motor capacity	[kW]	0.75	1.5	2.2	3.7	5.5	7.5	11	15	18.5
	Rated current	[A]	4.2 (3.6)	7.0 (6.0)	9.6 (8.2)	15.2 (13)	15.2 (13)	31 (26)	45 (38)	58 (49)	70.5 (60)
	Overload capacity		120 % of rated motor capacity for 60 s; 150 % for 3 s (inverse-time characteristics)								
	Voltage		3-phase, 0 V up to power supply voltage								
	Frequency range		0.5–400 Hz								
Input	Power supply voltage		3-phase, 200–220 V AC at 50 Hz, 200–240 V AC at 60 Hz								
	Voltage range		170–242 V AC at 50 Hz, 170–264 V AC at 60Hz								
Others	Ambient temperature		50 °C								
Order information		Art. no.	239399	239400	239401	239402	239403	239404	239405	239406	239407

Product line			FR-F720P							
			22K	30K	37K	45K	55K	75K	90K	110K
Output	Rated motor capacity	[kW]	22	30	37	45	55	75	90	110
	Rated current	[A]	85 (72)	114 (97)	140 (119)	170 (145)	212 (180)	288 (244)	346 (294)	432 (367)
	Overload capacity		120 % of rated motor capacity for 60 s; 150 % for 3 s (inverse-time characteristics)							
	Voltage		3-phase, 0 V up to power supply voltage							
	Frequency range		0.5–400 Hz							
Input	Power supply voltage		3-phase, 200–220 V AC at 50 Hz, 200–240 V AC at 60 Hz							
	Voltage range		170–242 V AC at 50 Hz, 170–264 V AC at 60Hz							
Others	Ambient temperature		50 °C							
Order information		Art. no.	239408	239409	239410	239411	239412	239413	239414	239415

Specifications of Overseas Types FR-A760

Product line			FR-A760							
			00017-NA	00040-NA	00061-NA	00120-NA	00220-NA	00330-NA	00550-NA	00840-NA
Output	Rated motor capacity	[kW]	0.75	2.2	3.7	7.5	15	22	37	55
	Rated current [A]	SLD	2.7 (2.3)	6.1 (5.2)	9 (7.65)	17 (14.4)	32 (27.2)	45 (38.2)	68 (57.8)	108 (91.8)
		LD	2.5 (2.1)	5.6 (4.8)	8.2 (7)	16 (13.6)	27 (22.9)	41 (34.8)	62 (52.7)	99 (84.1)
		ND	1.7	4	6.1	12	22	33	55	84
		HD	1.0	2.7	4	9	16	24	41	63
	Overload capacity	SLD	110 % of rated motor capacity for 60 s; 120 % for 3 s (max. ambient temperature 40 °C) from to 00061-NA, 110 % of rated motor capacity for 60 s; 120 % for 3 s (max. ambient temperature 30 °C)							
		LD	120 % of rated motor capacity for 60 s; 150 % for 3 s (max. ambient temperature 40 °C)							
		ND	150 % of rated motor capacity for 60 s; 200 % for 3 s (max. ambient temperature 40 °C)							
		HD	200 % of rated motor capacity for 60 s; 250 % for 3 s; 280 % for 5 s (max. ambient temperature 40 °C)							
	Voltage		3-phase AC, 0 V to power supply voltage							
	Frequency range		0.2–400 Hz							
Input	Power supply voltage		3-phase, 525–600 V AC at 60 Hz							
	Voltage range		472–660 V AC at 60 Hz							
Others	Ambient temperature		30–40 °C							
Order information		Art. no.	206905	206906	206907	206908	206909	206910	206911	206912

Product line			FR-A760								
			01040-NA	01310-NA	01520-NA	02210-NA	02550-NA	03040-NA	04020-NA	04960-NA	06630-NA
Output	Rated motor capacity	[kW]	75	90	110	132	185	220	280	355	450
	Rated current [A]	SLD	144 (122)	167(141)	243 (206)	289 (245)	336 (285)	442 (375)	545 (463)	647 (549)	850 (722)
		LD	131 (111)	152 (129)	221 (187)	255 (216)	304 (258)	402 (341)	496 (421)	589 (500)	773 (657)
		ND	104 (88)	131 (111)	152 (129)	221 (187)	255 (216)	304 (258)	402 (341)	496 (421)	663 (563)
		HD	84 (71)	104 (88)	131 (111)	152 (129)	202 (171)	255 (216)	304 (258)	402 (341)	589 (500)
	Overload capacity	SLD	110 % of rated motor capacity for 60 s; 120 % for 3 s (max. ambient temperature 40 °C)								
		LD	120 % of rated motor capacity for 60 s; 150 % for 3 s (max. ambient temperature 50 °C)								
		ND	150 % of rated motor capacity for 60 s; 200 % for 3 s (max. ambient temperature 50 °C)								
		HD	200 % of rated motor capacity for 60 s; 250 % for 3 s; 280 % for 5 s (max. ambient temperature 40 °C)								
	Voltage		3-phase AC, 0 V to power supply voltage								
	Frequency range		0.2–400 Hz								
Input	Power supply voltage		3-phase, 525–600 V AC at 60 Hz								
	Voltage range		472–660 V AC at 60 Hz								
Others	Ambient temperature		40–50 °C								
Order information		Art. no.	206913	206934	206935	206936	206937	206938	206939	236518	236519

A

Accessories 48
AC Chokes 58
Assignment of Signal Terminals
- FR-A700 31
- FR-A800 and FR-CC2 43
- FR-D700 SC 15
- FR-E700 SC 19
- FR-F700 25

B

Block Diagram
- FR-A741 29
- FR-A770 30
- FR-A800 40
- FR-A842 41
- FR-CC2 42
- FR-D700 SC 14
- FR-E700 SC 18
- FR-F700 24

Brake Resistors 62
Brake Units 61

C

Common Specifications
- FR-A741/FR-A770 28
- FR-A800 38
- FR-CC2 39
- FR-F700 23

Communication 8

D

DC Chokes 59
Dimensions 68
- AC Chokes 81
- Brake Resistors 87
- Brake Units 85
- DC Chokes 78
- du/dt 84
- FR-A700 73
- FR-A800 74
- FR-CC2 77
- FR-D700 SC 69
- FR-E700 SC 70
- FR-F700 72
- Harmonic Converter 88
- Noise Filters 81
- Parameter Units 68
- Profibus-Gateway 88
- Sinusoidal Filter 85

du/dt Filters 55

E

EMC 51
External Heatsink Frame 57

H

Harmonic Converter 63
- Common Specifications 64
- Provided Peripheral Devices 65
- Technical Details FR-HC2 63

I

Internal and External Options 48

M

Maintenance and Standards 11

N

Noise Filters 53

O

Operating Conditions for Inverters 45
Overseas Types 92
Overview External Options 50
Overview Frequency Inverters 4
Overview Internal Options 49
Overview of Noise Filters 52

P

Parameter Overview 44
Parameter Units 60
Profibus-Gateway 66

S

Sinusoidal Filter 56
Software 67
- FR-Configurator 67

Special features 7
System Configuration
- FR-A800 46
- FR-A842 47

T

Technical Details
- FR-A741 27
- FR-A770 26
- FR-A820 35
- FR-A840 32
- FR-A842 34
- FR-CC2 37
- FR-D700 SC 12
- FR-E700 SC 16
- FR-F700 20

A world of automation solutions

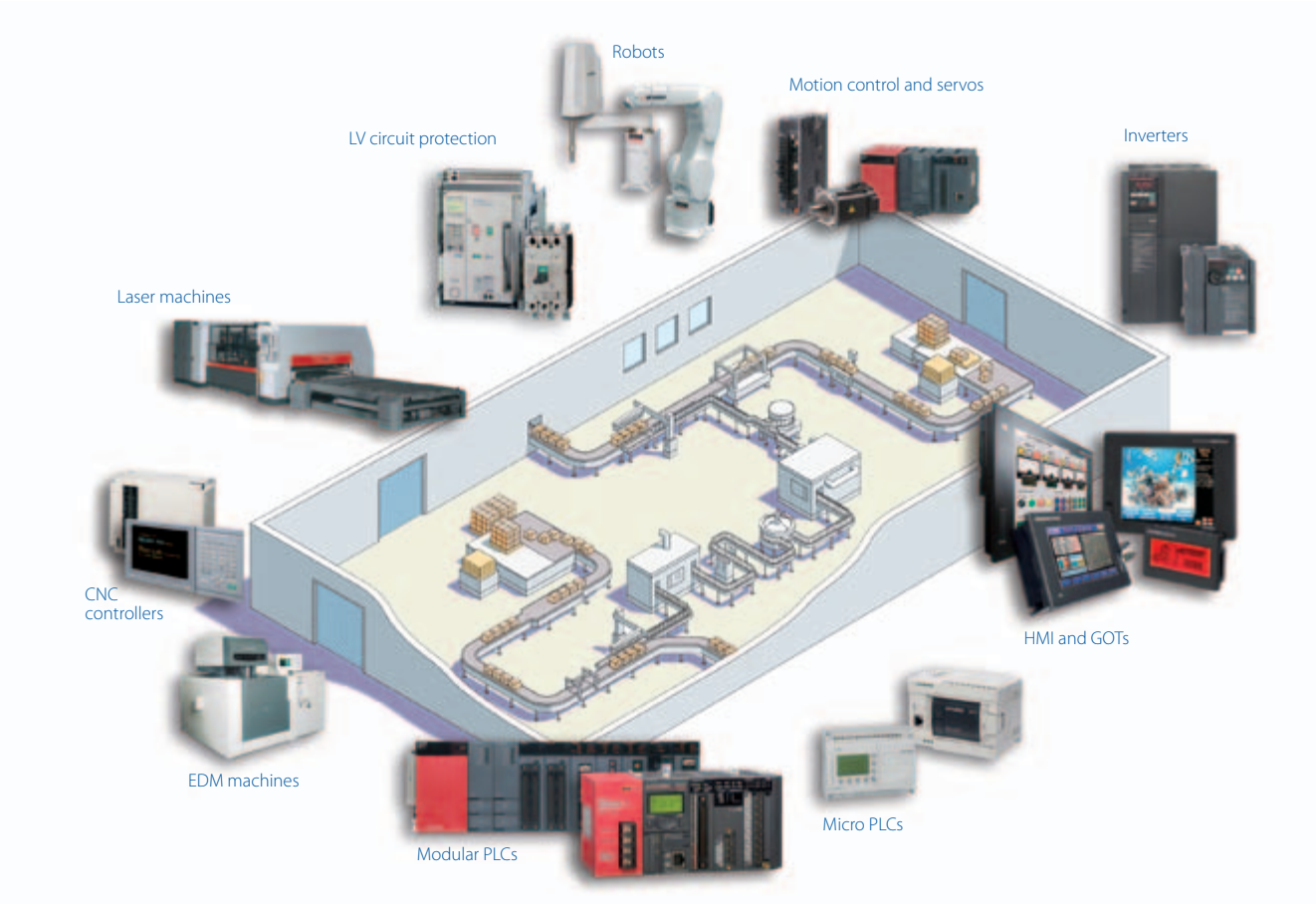

Mitsubishi Electric offers a wide range of automation equipment from PLCs and HMIs to CNC and EDM machines

A name to trust

Since its beginnings in 1870, some 45 companies use the Mitsubishi name, covering a spectrum of finance, commerce and industry.

The Mitsubishi brand name is recognized around the world as a symbol of premium quality.

Mitsubishi Electric Corporation represents space development, transportation, semiconductors, energy systems, communications and information processing, audio visual equipment, home electronics, building and energy management and automation systems, and has 237 factories and laboratories worldwide in over 121 countries.

This is why you can rely on a Mitsubishi Electric automation solution – because we know first hand about the need for reliable, efficient, easy-to-use automation and control.

As one of the world's leading companies with a global turnover of 4 trillion Yen (approximately $40 billion), employing over 100,000 people, Mitsubishi Electric has the resource and the commitment to deliver the ultimate in service and support as well as the best products.

Global partner. Local friend.

European Offices

Mitsubishi Electric Europe B.V. Germany
Gothaer Straße 8
D-40880 Ratingen
Phone: +49 (0)2102 / 486-0

Mitsubishi Electric Europe B.V. Czech Rep.
Radlická 751/113e Avenir Business Park
CZ-158 00 Praha 5
Phone: +420 251 551 470

Mitsubishi Electric Europe B.V. France
25, Boulevard des Bouvets
F-92741 Nanterre Cedex
Phone: +33 (0)1 / 55 68 55 68

Mitsubishi Electric Europe B.V. Italy
Viale Colleoni 7 Palazzo Sirio
I-20864 Agrate Brianza (MB)
Phone: +39 039 / 60 53 1

Mitsubishi Electric Europe B.V. Ireland
Westgate Business Park, Ballymount
IRL-Dublin 24
Phone: +353 (0)1 4198800

Mitsubishi Electric Europe B.V. Netherlands
Nijverheidsweg 23a
NL-3641RP Mijdrecht
Phone: +31 (0) 297250350

Mitsubishi Electric Europe B.V. Poland
ul. Krakowska 50
PL-32-083 Balice
Phone: +48 (0) 12 347 65 00

Mitsubishi Electric Europe B.V. Russia
52, bld. 1 Kosmodamianskaya emb.
RU-115054 Moscow
Phone: +7 495 / 721 2070

Mitsubishi Electric Europe B.V. Spain
Carretera de Rubí 76-80 Apdo. 420
E-08190 Sant Cugat del Vallés (Barcelona)
Phone: +34 (0) 93 / 5653131

Mitsubishi Electric Europe B.V. (Scandinavia) Sweden
Fjelievägen 8
SE-22736 Lund
Phone: +46 (0) 8 625 10 00

Mitsubishi Electric Turkey Elektrik Ürünleri A.Ş. Turkey
Şerifali Mahallesi Nutuk Sokak No:5
TR-34775 Ümraniye-İSTANBUL
Phone: +90 (0)216 / 526 39 90

Mitsubishi Electric Europe B.V. UK
Travellers Lane
UK-Hatfield, Herts. AL10 8XB
Phone: +44 (0)1707 / 28 87 80

Mitsubishi Electric Europe B.V. UAE
Dubai Silicon Oasis
United Arab Emirates - Dubai
Phone: +971 4 3724716

Representatives

GEVA Austria
Wiener Straße 89
A-2500 Baden
Phone: +43 (0)2252 / 85 55 20

OOO TECHNIKON Belarus
Prospect Nezavisimosti 177-9
BY-220125 Minsk
Phone: +375 (0)17 / 393 1177

ESCO DRIVES Belgium
Culliganlaan 3
BE-1831 Diegem
Phone: +32 (0)2 / 717 64 60

KONING & HARTMAN B.V. Belgium
Woluwelaan 31
BE-1800 Vilvoorde
Phone: +32 (0)2 / 257 02 40

INEA RBT d.o.o. Bosnia and Herzegovina
Stegne 11
SI-1000 Ljubljana
Phone: +386 (0)1/ 513 8116

AKHNATON Bulgaria
4, Andrei Ljapchev Blvd., PO Box 21
BG-1756 Sofia
Phone: +359 (0)2 / 817 6000

INEA CR Croatia
Losinjska 4 a
HR-10000 Zagreb
Phone: +385 (0)1 / 36 940 - 01/ -02/ -03

AutoCont C.S. S.R.O. Czech Republic
Kafkova 1853/3
CZ-702 00 Ostrava 2
Phone: +420 595 691 150

Beijer Electronics A/S Denmark
Lykkegardsvej 17
DK-4000 Roskilde
Phone: +45 (0)46/ 75 76 66

HANS FØLSGAARD A/S Denmark
Theilgaards Torv 1
DK-4600 Køge
Phone: +45 4320 8600

Beijer Electronics Eesti OÜ Estonia
Pärnu mnt.160i
EE-11317 Tallinn
Phone: +372 (0)6 / 51 81 40

Beijer Electronics OY Finland
Vanha Nurmijärventie 62
FIN-01670 Vantaa
Phone: +358 (0)207 / 463 500

PROVENDOR OY Finland
Teljänkatu 8 A3
FIN-28130 Pori
Phone: +358 (0) 2 / 522 3300

UTECO A.B.E.E. Greece
5, Mavrogenous Str.
GR-18542 Piraeus
Phone: +30 (0)211 / 1206-900

MELTRADE Kft. Hungary
Fertő utca 14.
HU-1107 Budapest
Phone: +36 (0)1 / 431-9726

TOO Kazpromavtomatika Kazakhstan
Ul. Zhambyla 28
KAZ-100017 Karaganda
Phone: +7 7212 / 50 10 00

Beijer Electronics SIA Latvia
Ritausmas iela 23
LV-1058 Riga
Phone: +371 (0)6 / 784 2280

Beijer Electronics UAB Lithuania
Goštautų g. 3
LT-48324 Kaunas
Phone: +370 37 262707

ALFATRADE Ltd. Malta
99, Paola Hill
Malta-Paola PLA 1702
Phone: +356 (0)21 / 697 816

INTEHSIS SRL Moldova
bld. Traian 23/1
MD-2060 Kishinev
Phone: +373 (0)22 / 66 4242

HIFLEX AUTOM. B.V. Netherlands
Wolweverstraat 22
NL-2984 CD Ridderkerk
Phone: +31 (0)180 / 46 60 04

IMTECH Marine Netherlands B.V. Netherlands
Sluisjesdijk 155
NL-3087 AG Rotterdam
Phone: +31 10 / 487 18 24

KONING & HARTMAN B.V. Netherlands
Energieweg 1
NL-2627 AP Delft
Phone: +31 (0)15 260 99 06

Beijer Electronics AS Norway
Postboks 487
NO-3002 Drammen
Phone: +47 (0)32 / 24 30 00

Fonseca S.A. Portugal
R. João Francisco do Casal 87/89
PT-3801-997 Aveiro, Esgueira
Phone: +351 (0)234 / 303 900

Sirius Trading & Services Romania
Aleea Lacul Morii Nr. 3
RO-060841 Bucuresti, Sector 6
Phone: +40 (0)21 / 430 40 06

INEA SR d.o.o. Serbia
Ul. Karadjordjeva 12/217
SER-11300 Smederevo
Phone: +386 (026) 461 54 01

SIMAP SK Slovakia
Jána Derku 1671
SK-911 01 Trenčín
Phone: +421 (0)32 743 04 72

INEA RBT d.o.o. Slovenia
Stegne 11
SI-1000 Ljubljana
Phone: +386 (0)1 / 513 8116

Beijer Electronics Automation AB Sweden
Box 426
SE-20124 Malmö
Phone: +46 (0)40 / 35 86 00

OMNI RAY AG Switzerland
Im Schörli 5
CH-8600 Dübendorf
Phone: +41 (0)44 / 802 28 80

OOO "CSC-AUTOMATION" Ukraine
4-B, M. Raskovoyi St.
UA-02660 Kiev
Phone: +380 (0)44 / 494 33 44

I.C. SYSTEMS Ltd. Egypt
23 Al-Saad-Al-Alee St.
EG-Sarayat, Maadi, Cairo
Phone: +20 (0) 2 / 235 98 548

SHERF MOTION TECHN. Ltd. Israel
Rehov Hamerkava 19
IL-58851 Holon
Phone: +972 (0)3 / 559 54 62

CEG LIBAN Lebanon
Cebaco Center/Block A Autostrade DORA
Lebanon-Beirut
Phone: +961 (0)1 / 240 445

ADROIT TECHNOLOGIES South Africa
20 Waterford Office Park 189 Witkoppen Road
ZA-Fourways
Phone: + 27 (0)11 / 658 8100

Version check

Mitsubishi Electric Europe B.V. / FA - European Business Group / Gothaer Straße 8 / D-40880 Ratingen / Germany /
Tel.: +49(0)2102-4860 / Fax: +49(0)2102-4861120 / info@mitsubishi-automation.com / https://eu3a.mitsubishielectric.com

Art. no. 206313-G / 07.2014 / Specifications subject to change / All trademarks and copyrights acknowledged.

MITSUBISHI ELECTRIC
Changes for the Better